TECHNICAL PROCEDURES
VOLUME THREE

P/N: 072-0062

Revision: June, 1987

Apple ImageWriter Section

Apple Technical Procedures

Volume Three

Table of Contents

IMAGEWRITER TECHNICAL PROCEDURES

TABLE OF CONTENTS

Section 1 - Introduction

Section 2 - Take-Apart

Section 3 - Troubleshooting

Section 4 - Illustrated Parts List

Section 5 - 15 Inch ImageWriter

Section 6 - Appendix

ImageWriter Technical Procedures

Section 1

Introduction

Contents:

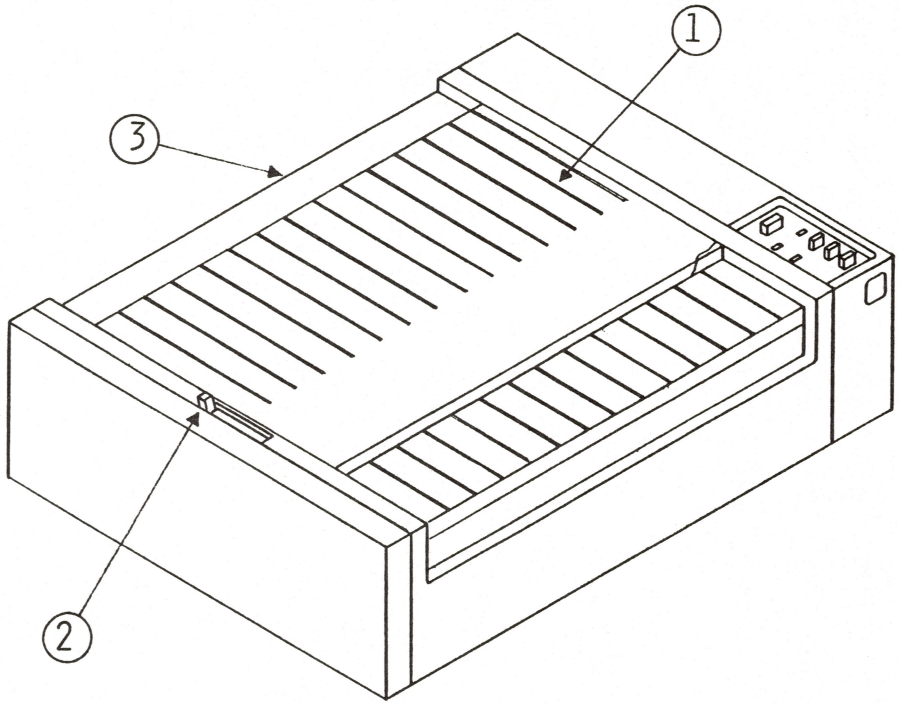

FIGURE 1

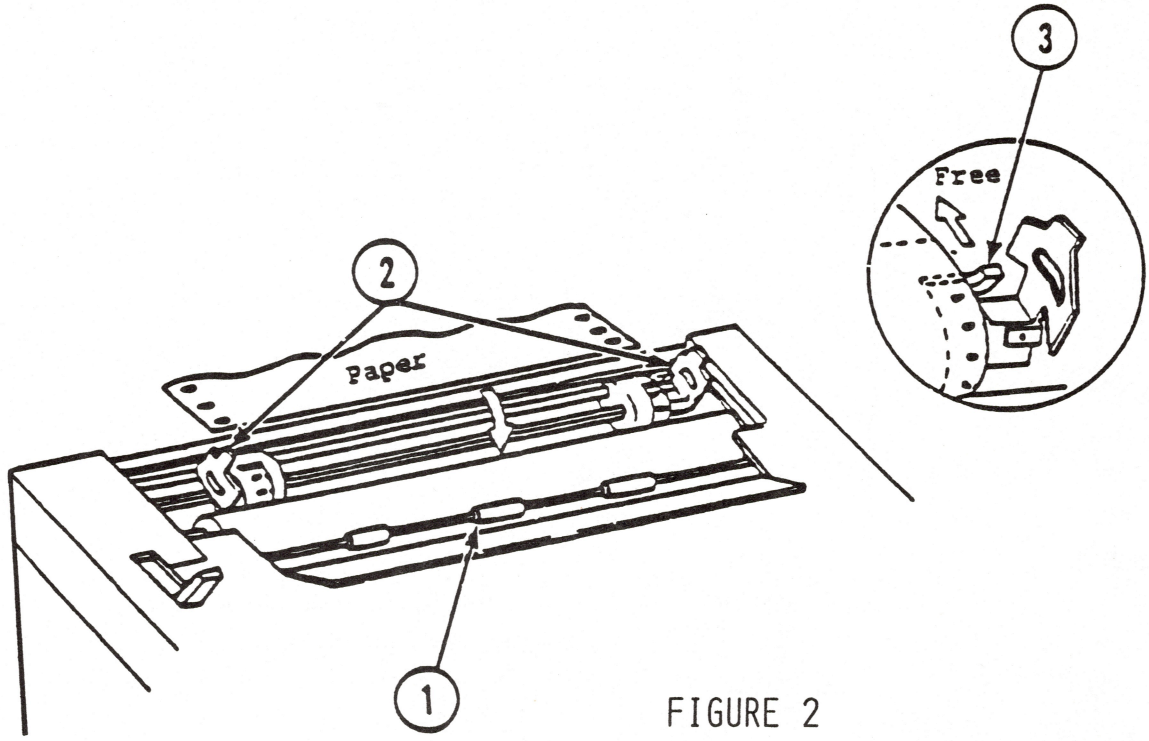

FIGURE 2

The ImageWriter is an improved version of the Dot Matrix Printer offering the following advantages:

- o faster printing speed for graphics and text
- o lower noise level
- o easier removal of switch panel, power switch, and covers
- o standard interface (serial instead of parallel)

The switch panel and power switch have been relocated and the case has been restyled, but the mechanical assembly and adjustments are the same as for the Dot Matrix Printer.

A. POWER ON AND OFF, LOAD AND REMOVE PAPER AND RIBBON CARTRIDGE, AND RUN SELF-TEST

Power On and Off

1. Connect the power cord to the printer.
2. Plug the power cord into an electrical outlet.
3. Press the power switch ON.
4. Check the switch panel. Make sure the POWER light comes on.
5. Press the power switch OFF.

Load Paper

1. Make sure the power is off.
2. Raise the print cover toward you (see Figure 1, #1).
3. Pull the paper release lever forward (see Figure 1, #2).
4. Lift up and remove the paper cover (see Figure 1, #3).
5. Pull the paper bail shaft forward (see Figure 2, #1).
6. Lift the covers up on the right and left tractor sprockets (see Figure 2, #2).
7. Make sure the left tractor is all the way over to the left. To move the tractor, push back the white lever (see Figure 2, #3). Move the tractor all the way over to the left. To lock the tractor in place, pull the white lever back toward you.

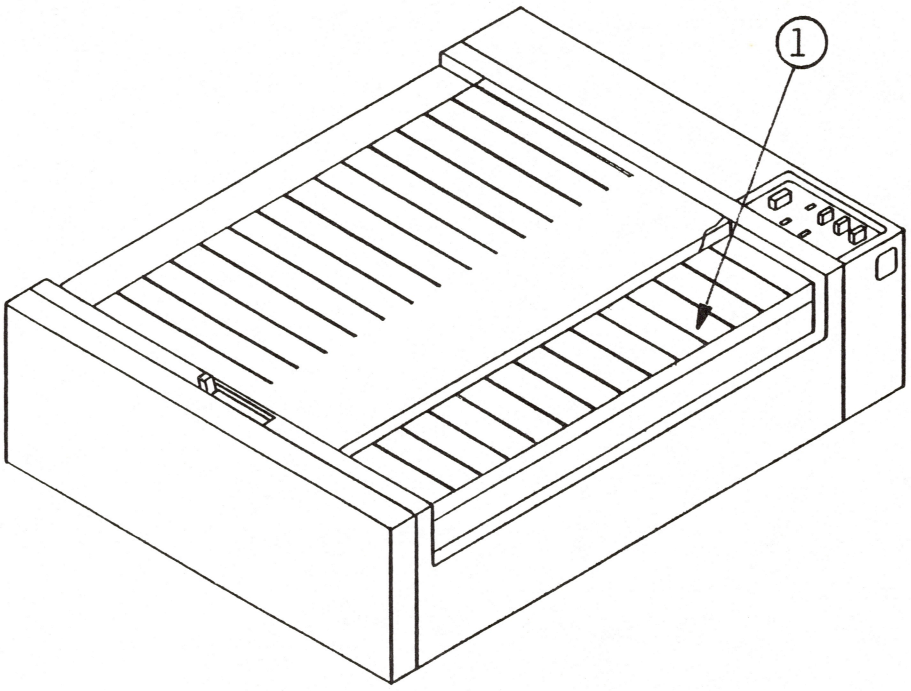

FIGURE 3

8. Place the paper over the sprockets tractor pins. If the paper doesn't line up with the sprockets, move the right tractor until it does.

9. Push down the covers on right and left tractor sprockets.

10. Turn the platen knob until the paper comes through.

11. Push back the paper bail shaft.

12. Push back the release lever.

13. Put the paper cover back on.

14. Push back the print cover.

15. Replace the paper cover.

Remove Paper

1. Make sure the power is off.

2. Pull the paper cover toward you.

3. Remove the paper cover.

4. Pull the release lever forward.

5. Turn the platen knob to back out the paper.

Remove Ribbon Cartridge

1. Make sure power is off.

2. Lift up and remove the carrier cover (see Figure 3, #1).

3. While pushing down on the cartridge latch arms, lift up the cartridge.

4. Replace the carrier cover.

NOTE: Be sure to replace the carrier cover before attempting to operate the printer. The printer will not print without the carrier cover in place.

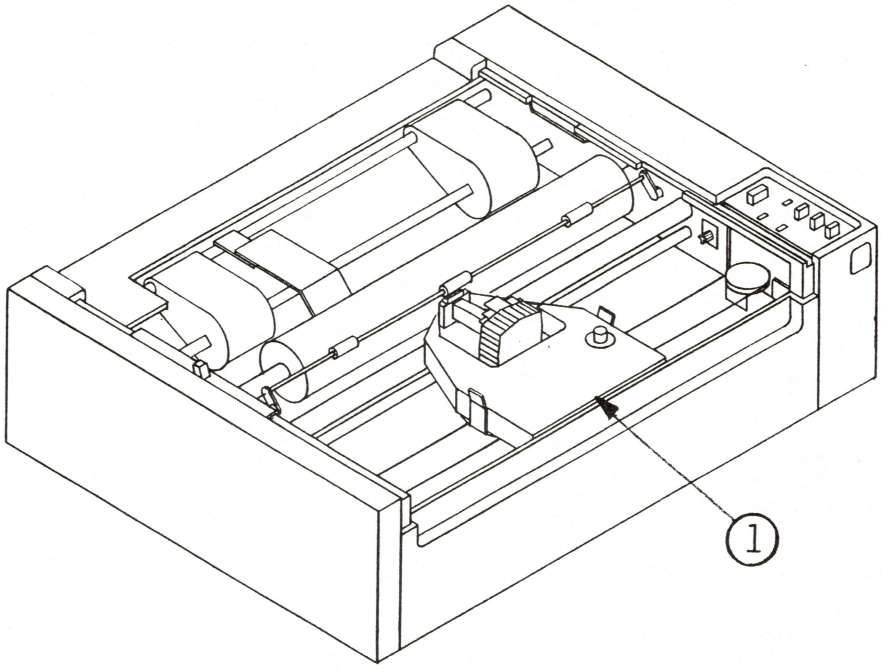

FIGURE 4

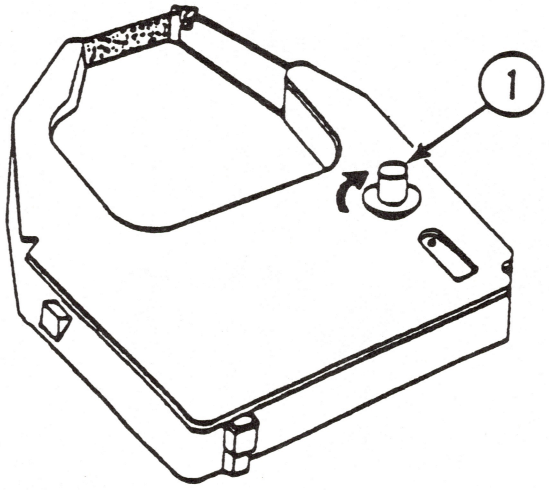

FIGURE 5

Load Ribbon Cartridge

1. Make sure the power is off.

2. Remove the carrier cover.

3. Get a ribbon cartridge.

4. Place the cartridge on the ribbon support plate.

5. Push down on the cartridge until it snaps into place. (See Figure 4, #1.)

6. On the cartridge, turn the knob in the direction shown until you hear it "click" and the ribbon is taut (see Figure 5, #1).

7. Replace the carrier cover.

Run Self-test

NOTE: If the select button is accidently depressed during power-up, the next data that is sent to the ImageWriter will be a hexadecimal dump. If this problem occurs, power the ImageWriter off and then back on. The printer will power up in the proper mode.

1. Make sure the power is off.

2. Load the paper. Make sure the paper is secure under the roller shaft.

3. To run self-test, press and hold down the form feed switch on the switch panel, then turn the power on. The printer will then start printing out lines of characters. Each line contains the letters of the alphabet, the numbers 0 through 9, and a series of typographical characters.

   NOTE: Press the form feed switch first and make sure it is still pressed down when you turn the power on.

4. To end the test, turn power off.

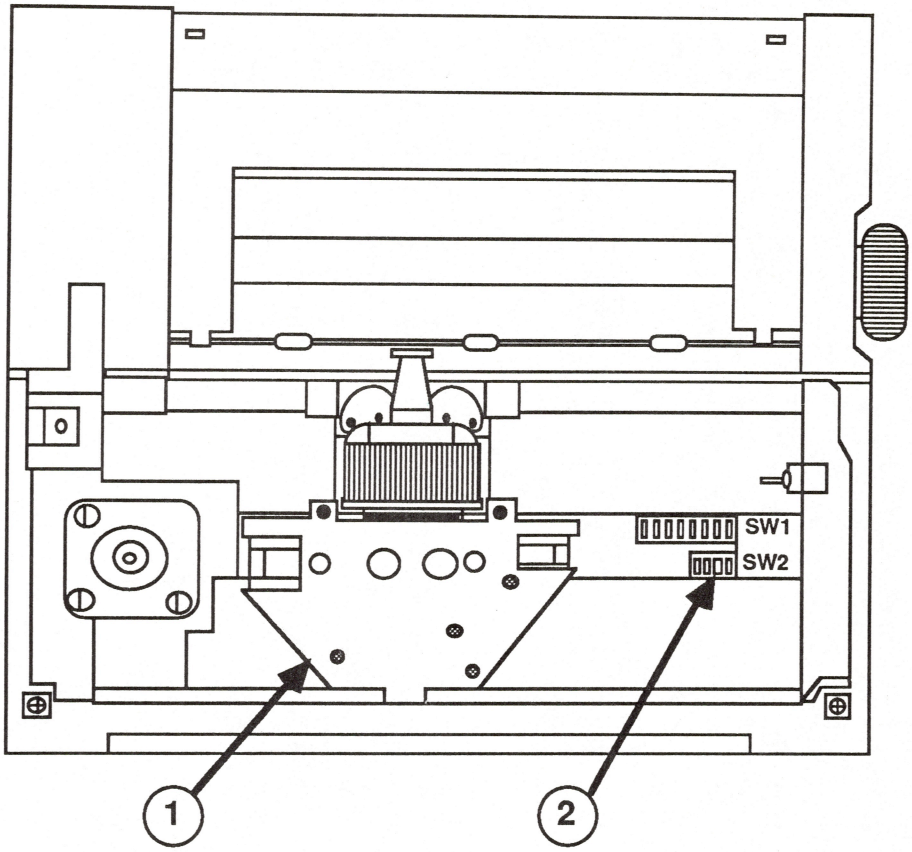

FIGURE 6

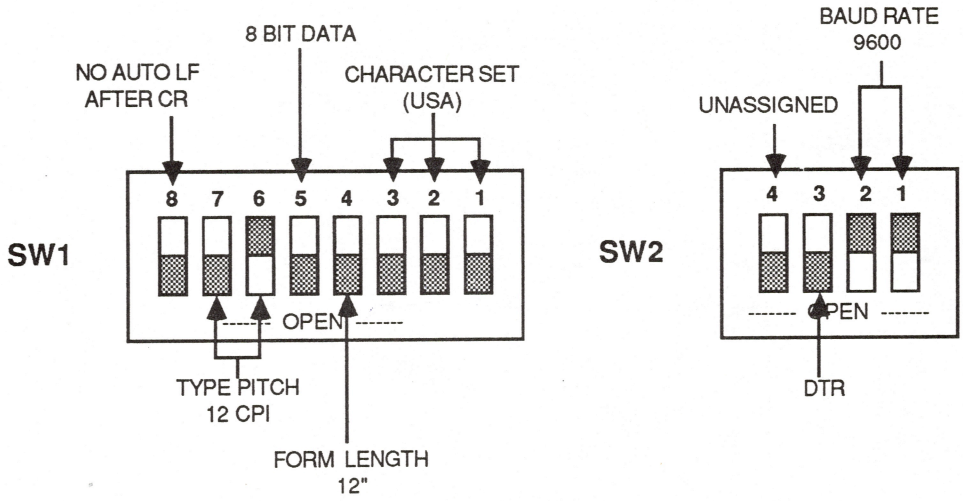

FIGURE 7

B. SET CONFIGURATION SWITCHES

Configuration switches are used to provide variations in the ways that the printer may be operated. There is not a single "correct" setting for the switches as this will vary according to the customer's needs. Only the factory settings are shown. For additional information on switch settings refer to the ImageWriter User's Manual.

For this procedure you will need:

A tiny flatblade screwdriver

1. Make sure power is off.
2. Remove the paper and carrier covers.
3. Slide the carrier all the way to the left. (See Figure 6, #1).
4. Locate switches SW 1 and SW 2. (See Figure 6, #2.)
5. Pull the plastic strip out of the way .
6. Use a small screwdriver to move the switch handles as desired. Figure 7 shows the switches as they were set at the factory: the black half of a box shows which position the switch handle is in. A switch is said to be open when its handle is toward the front of the printer. It is closed when its handle is toward the back of the printer.
7. Push the plastic strip back over the switches.
8. Replace the carrier cover.
9. Run the self test.

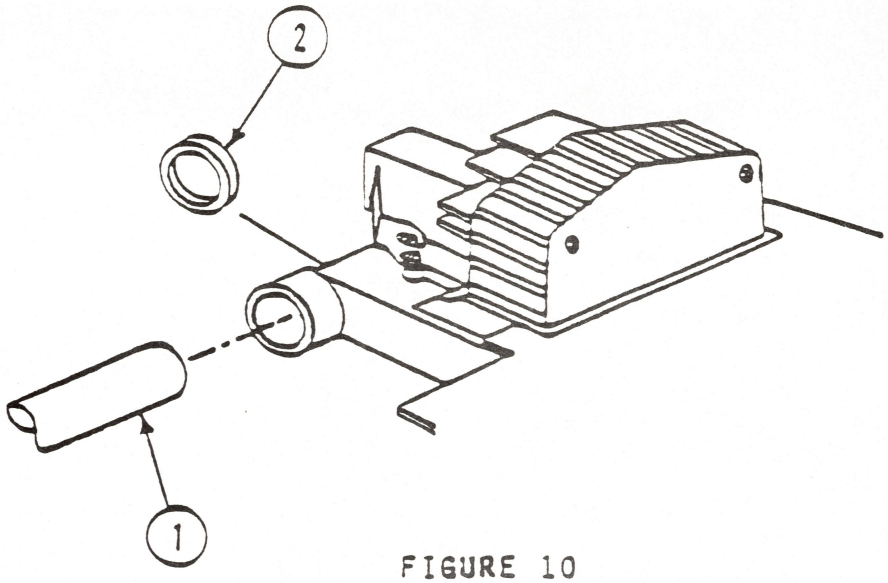

FIGURE 10

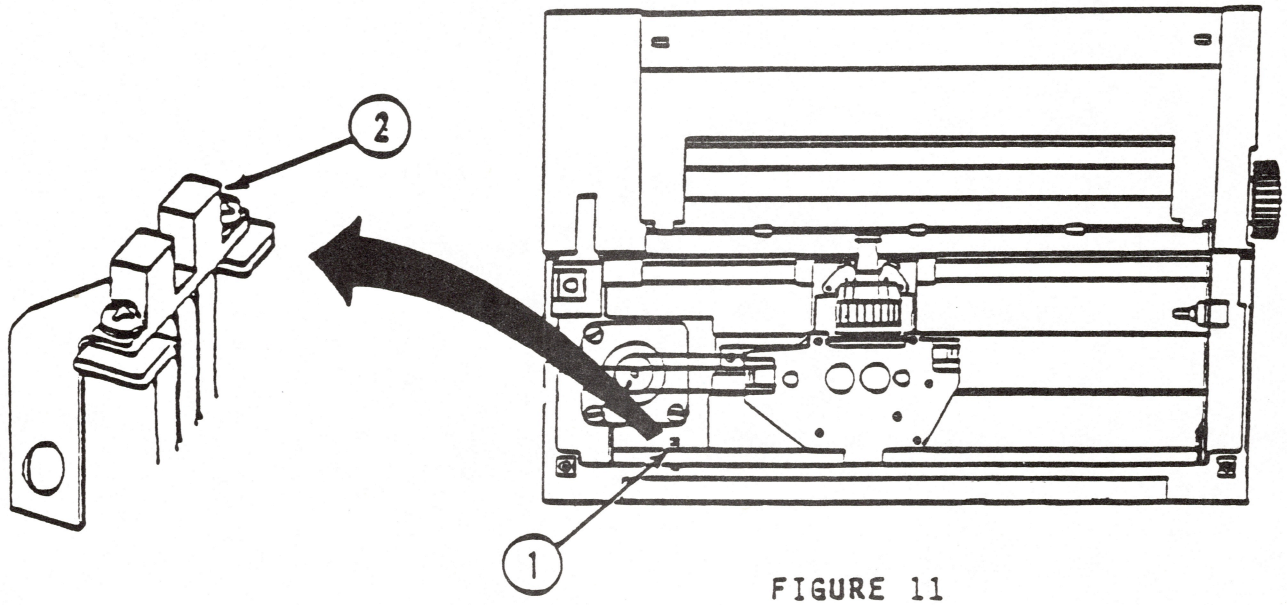

FIGURE 11

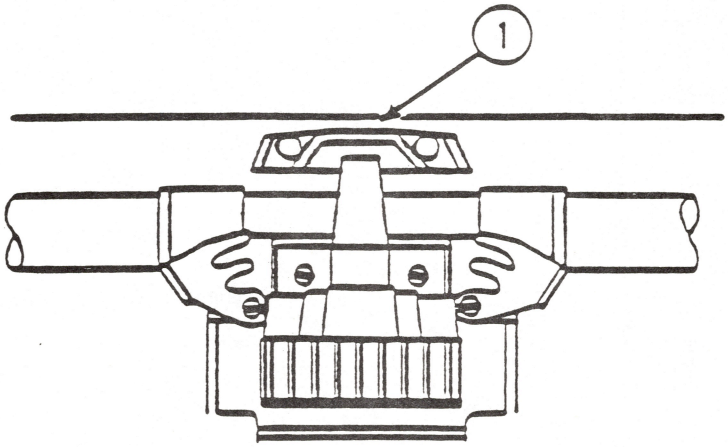

FIGURE 12

C. PERIODIC MAINTENANCE

You should clean the printer as required. You should lubricate the printer only once a year, or more often when operated in a heavy printing environment.

1. Make sure the power is off.
2. Remove the paper cover and the carrier cover.
3. Remove the paper and ribbon cartridge.
4. On the carrier shaft, wipe off any dirt with dry gauze or absorbent cotton (see Figure 10, #1).
5. On the lubrication ring (see Figure 10, #2), apply six drops of lubrication oil (tellus #46, Apple part number 960-0006). Clean off any excess.
6. Find the detector plate. It is on the left front side of the printer, hidden just below the guide rail (see Figure 11, #1).
7. Using a brush, remove any paper dust (see Figure 11, #2).
8. Clean the dot head (see Figure 12, #1) with a low residue cleaner such as isopropyl alcohol or freon.
9. Replace the ribbon cartridge.
10. Perform the self test to ensure optimum printing performance.

D. MAINTENANCE SCHEDULE

The following table summarizes the manufacturers recommended maintenance intervals:

OPERATOR -- As required	DEALER SERVICE -- As required during preventive or corrective maintenance	DEALER SERVICE -- Once every year or 500,000 lines of print	DEALER SERVICE -- Once every 2 years or 1,000,000 lines of print	
	x	x		Clean and lubricate carrier shaft
		x		Lubricate platen sleeve bearings
		x		Lubricate tractor sleeve bearings
	x	x		Check ribbon wire tension
	x	x		Check carrier wire tension
	x	x		Clean dot head
	x	x		Clean detector plate
			x	Check motor mounting screws for looseness
x	x	x		Clean platen, feed rollers, and paper bail rollers
x	x	x		Check print quality

ImageWriter Technical Procedures

Section 2

Take-Apart

Contents:

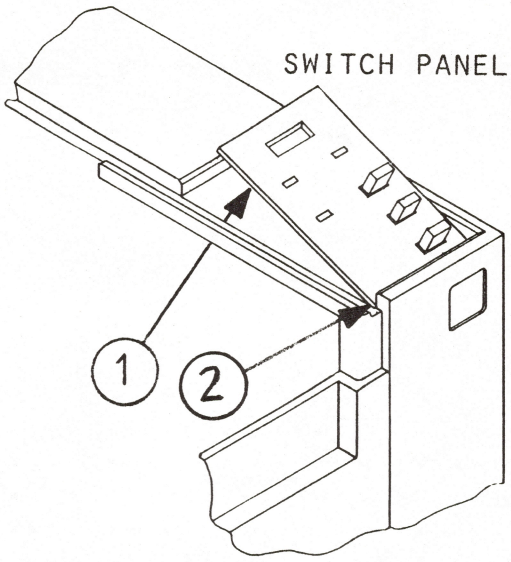

FIGURE 1

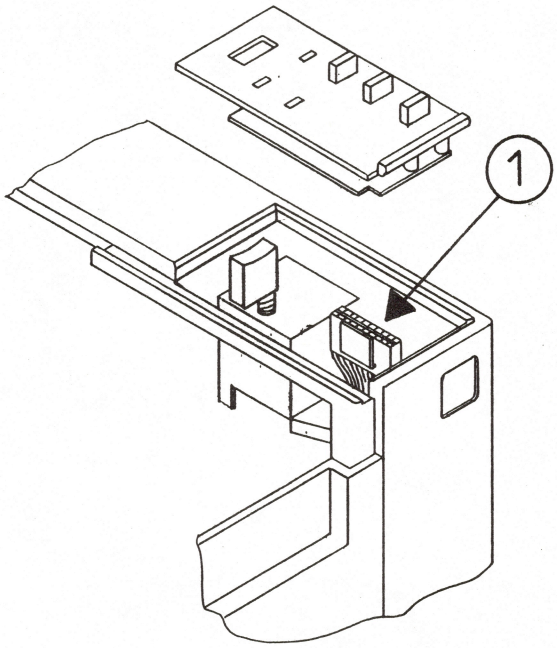

FIGURE 2

A. REMOVE AND REPLACE THE SWITCH PANEL

Remove:

1. Remove the power cord from printer.
2. Remove the carrier cover.
3. Push up and forward on the underside of the switch panel near the top until it pops free (see Figure 1, #1). Unplug the switch panel from the connector underneath (see Figure 2, #1).

Replace:

1. Plug the switch panel into its connector.
2. Hook the bottom of the switch panel under the top cover (see Figure 1, #2) and press down on the switch panel until it snaps into place.
3. Replace the carrier cover.
4. Plug the printer back in.
5. Turn Power on. Check that the power lamp lights.

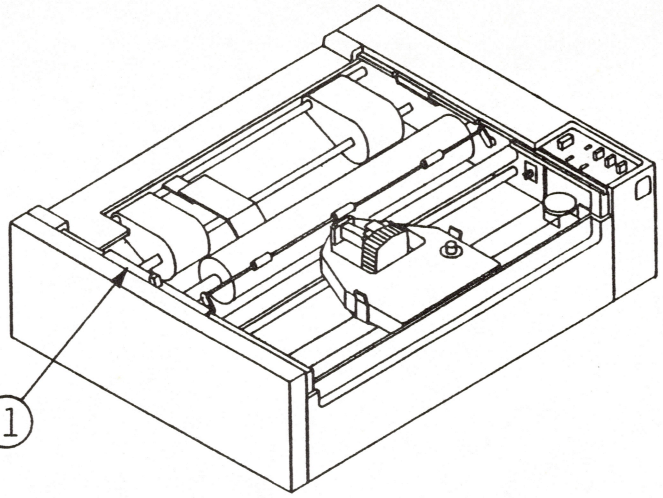

FIGURE 1

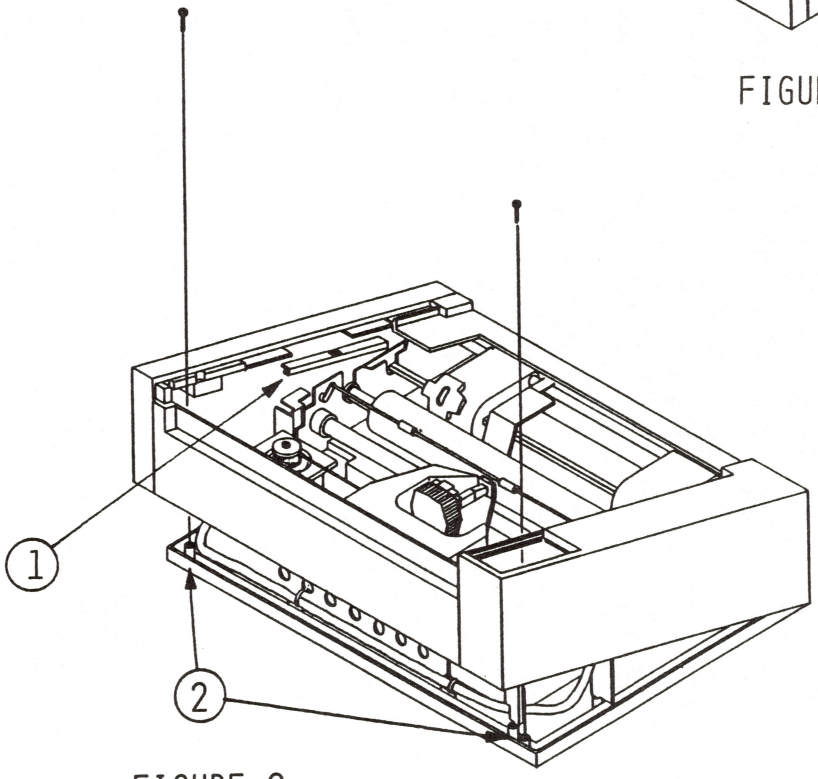

FIGURE 2

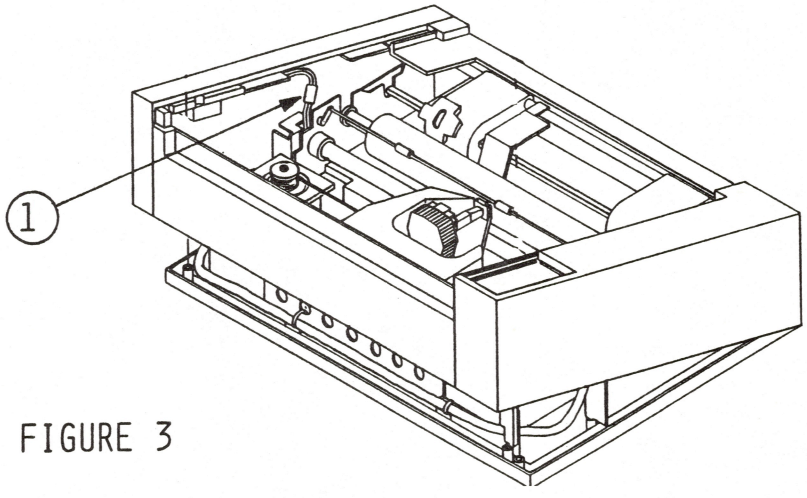

FIGURE 3

B. REMOVE AND REPLACE THE TOP COVER

For these procedures you will need:

Long shaft Phillips screwdriver

Remove:

1. Remove the power cord.
2. Lift off the carrier cover and pull off the platen knob.
3. Lift off the paper cover.
4. Remove the switch panel (see Section 2A).
5. Move the paper release lever to a position midpoint between its forward and rear position.
6. Replacing the cover will be much easier if you carefully note the position of the sliding cover for the paper release lever (see Figure 1, #1 and Figure 2, #1). This small piece will fall free unless held in place when the top is removed. Tape it or hold it in place with your thumb when the cover is pulled up.
8. Remove the two screws at the front of the printer (See Figure 2, #2) and lift up the front of the top cover.
9. Unplug the connector on the left hand side near the paper release lever (see Figure 3, #1).
10. Push the cover toward the rear to free it from the printer.

Replace:

1. Move the paper release lever to a position midpoint between its forward and rear position.

2. Tilt the front of the top cover up and hook the back of it on the catches at the rear of the printer.

3. Plug the connector on the left to its mate.

4. Carefully lower the cover so that it doesn't bind on cables and hold the sliding paper release cover in place as the paper release lever slides through it.

5. Replace the two front screws.

6. Replace the switch panel.

7. Replace the paper cover and carrier cover.

8. Connect power to the printer and run the self test.

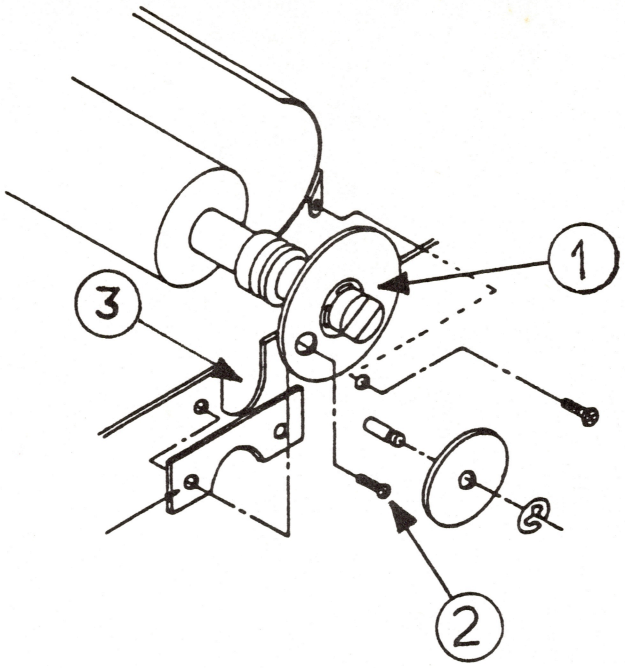

FIGURE 1

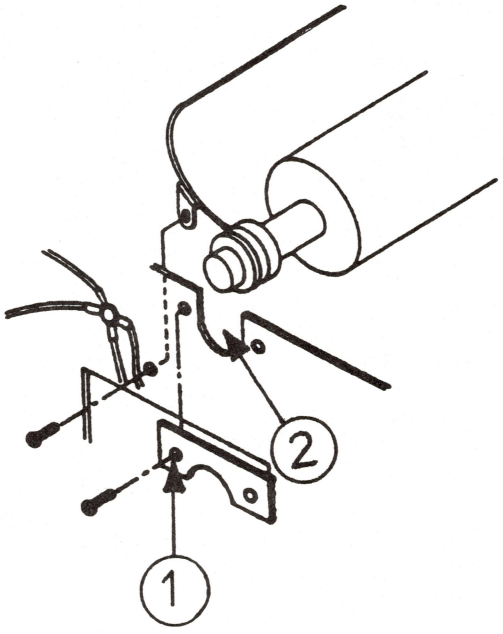

FIGURE 2

C. REMOVE AND REPLACE PLATEN

(For 15 inch ImageWriter, refer to Section 5C.)

For these procedures you will need:

Small Phillips screwdriver

Remove:

1. Remove the top cover (see Section 2B).

2. On the right side of the platen, rotate the paper feed gear (see Figure 1, #1) until the hole in it lines up with the platen shaft holder screw (see Figure 1, #2). Remove the screw and the platen shaft holder.

3. On the left side of the platen, remove the screw from the shaft holder (see Figure 2, #1).

4. The platen can now be removed by lifting it straight up. Removing the paper guide will cause slight deflection of the rear paper guide. If the paper guide becomes misformed, straighten it by hand after replacing the platen.

   NOTE: The platen can be cleaned by wiping with "Fedron" or "R41", available at printer supply houses.

   CAUTION: Fedron and R41 emit harmful vapors and must be used only in a well ventilated space. Close containers when not in use. Do not use platen cleaner on plastic parts.

Replace:

1. Slide the platen down into the chassis cutouts (see Figure 1, #3 and Figure 2, #2).

2. Replace the right and left platen shaft holders.

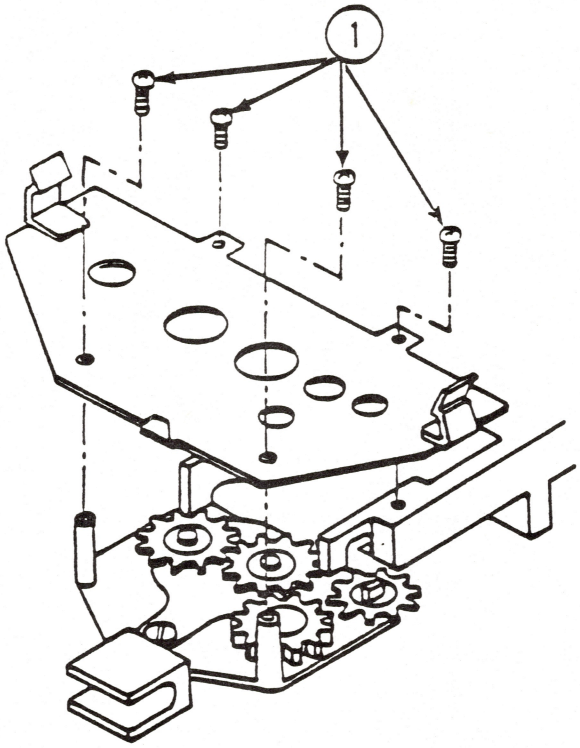

FIGURE 3

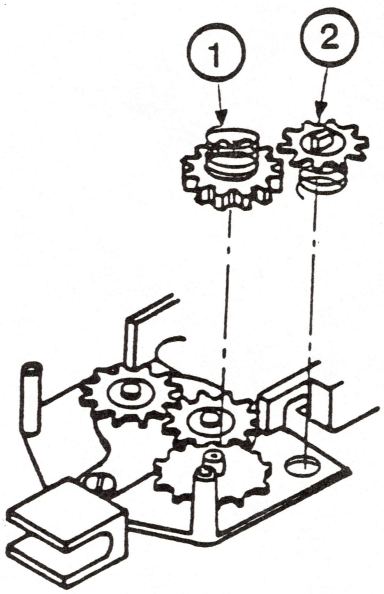

FIGURE 4

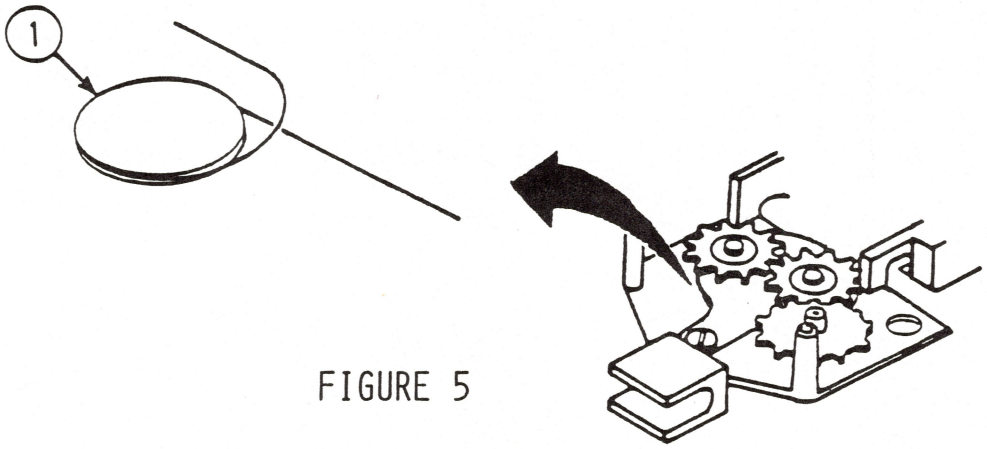

FIGURE 5

D. REMOVE AND REPLACE THE RIBBON WIRE

For these procedures you will need:

Small Phillips screwdriver

Remove:

1. Remove the power cord.
2. Remove the top cover (see Section 2B).
3. Remove the ribbon cartridge (see Section 1A).
4. Remove the four cartridge mount plate fixing screws (see Figure 3, #1).
5. **Slowly** lift off the cartridge mount plate.

   NOTE: There are springs beneath the cassette mount plate (see Figure 4). They may pop out when you lift up the mount plate.
6. Pull up the ratchet gear and ratchet spring (see Figure 4, #1). If they don't come off easily, carefully pry them off with a flat blade screwdriver.
7. Pull off the cartridge drive gear and the ribbon spring (see Figure 4, #2).
8. Notice how the ribbon wire is wrapped around the ribbon pulley gear (see Figure 5, #1). Also, notice how the ribbon wire goes through the carrier assembly. This will help you when you have to replace the ribbon wire.

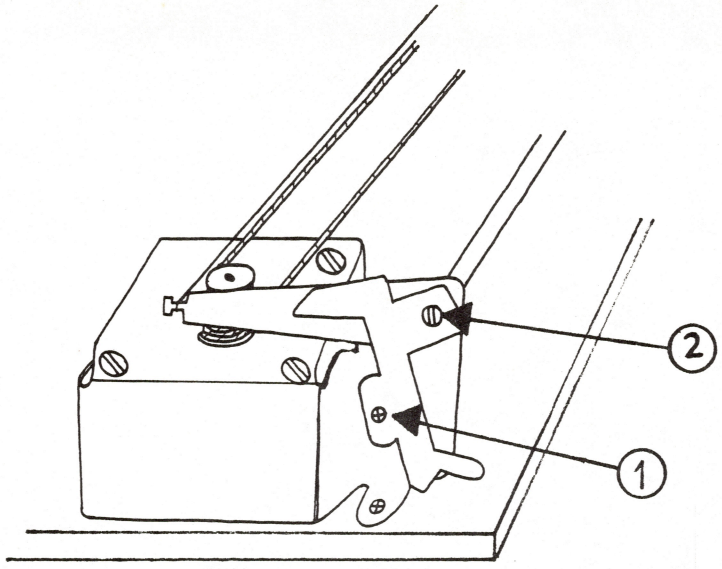

FIGURE 6

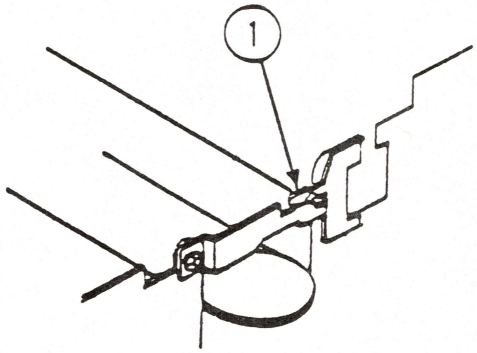

FIGURE 7

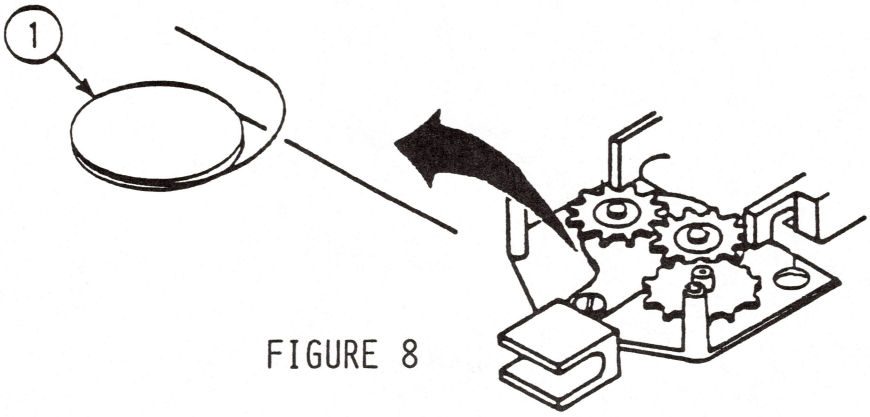

FIGURE 8

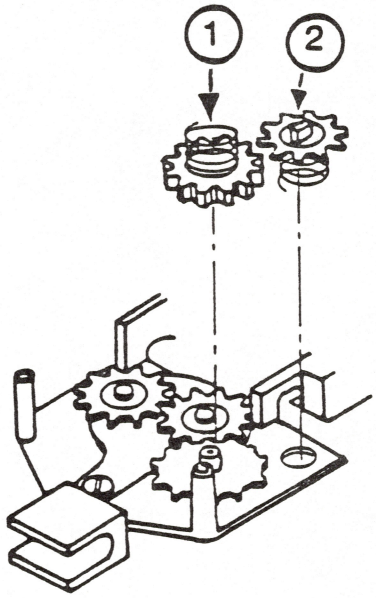

FIGURE 9

9. **(Omit this step for the 15 inch ImageWriter.)** Remove the screw that fastens the support bracket on the left side of the printer (see Figure 6, #1). Set the bracket aside.

10. Loosen the screw on the ribbon wire arm on the left side of the printer (see Figure 6, #2). Just give it a few turns to ease the tension on the wire.

11. Remove the wire from the wire holder on the right side of the printer (see Figure 7, #1).

12. Remove the other end of the wire from the wire holder on the left side of the printer.

13. Work the wire free from the ribbon pulley gear. Pull the wire out of the printer.

Replace:

1. Attach one end of the ribbon wire to the wire holder on the right side of the printer.

2. Work the wire around the pulley gear as shown (see Figure 8, #1).

3. Attach the other end of the ribbon wire to the wire holder on the left side of the printer.

4. Tighten the ribbon wire arm.

5. **(Omit this step for the 15 inch ImageWriter.)** Replace the support bracket.

6. Replace the ratchet spring and ratchet gear (see Figure 9, #1).

   NOTE: The small spring goes with the small gear and the big spring goes with the big gear.

7. Replace the ribbon spring and cartridge drive gear (see Figure 9, #2).

8. Replace the cartridge mount plate and ribbon cartridge.

9. Replace the top cover, carrier cover, and platen knob.

10. Run the self-test.

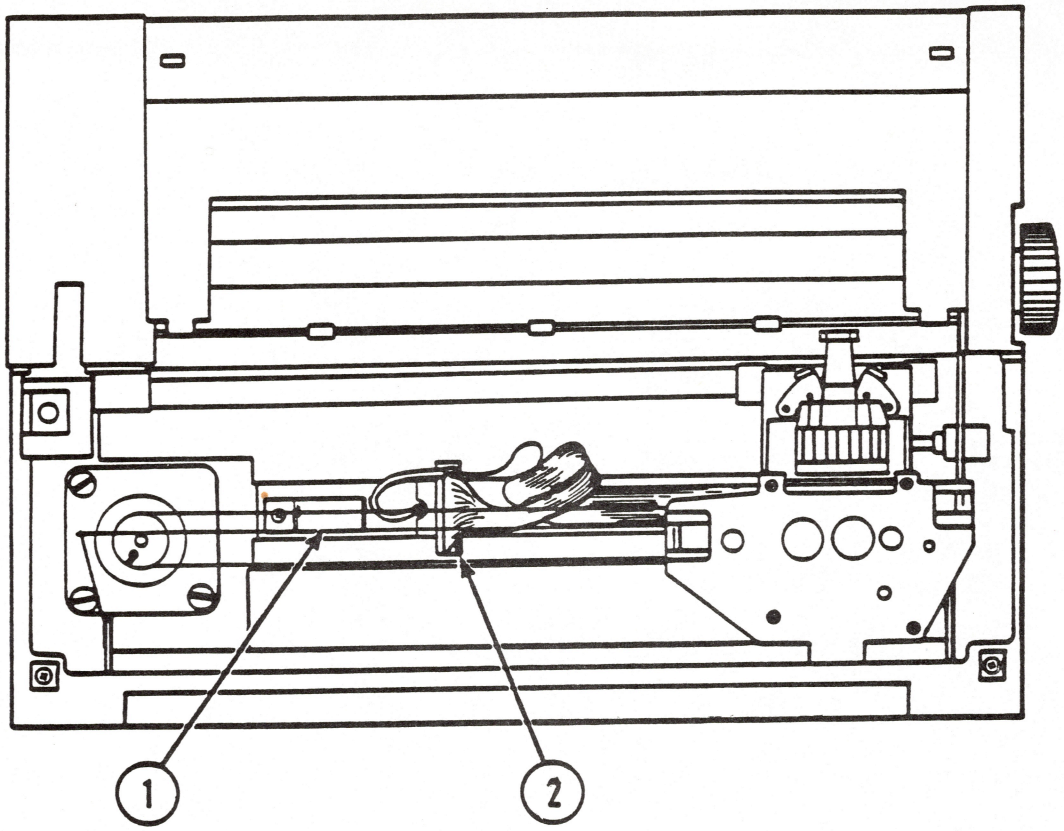

FIGURE 1

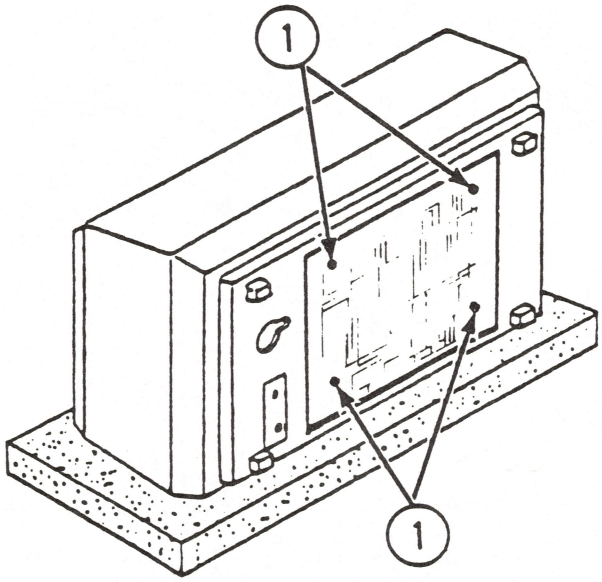

FIGURE 2

E. REMOVE/REPLACE THE CPU PC BOARD

For these procedures you will need:

5.5mm Nutdriver
7mm Nutdriver
Phillips Screwdriver

Remove:

1. Disconnect the power cord.
2. Remove the carrier cover.
3. Slide the carrier all the way to the right.
4. Loosen, but do not remove, the metal clip and gently pull up the ribbon until you can reach the dot head connector (see Figure 1, #1).
5. Gently work free the dot head connector (see Figure 1, #2). You might use needlenose pliers to grasp the connector.
6. Tuck the dot head connector under the cable so it stays out of the way.
7. Using a pad or cushion for protection, set the printer on its back (see Figure 2). You will have to hold it in this position for the next few steps.
8. Use a 5.5mm nutdriver to remove the four nuts from the bottom panel.
9. Pull off the panel.
10. Use an 7mm nutdriver to remove the four CPU PC board nuts (see Figure 2, #1).
11. Gently pull the board toward you. This will help you reach the plastic connectors on the board.
12. Using your fingers, work off the plastic connectors. (Do not pull on cable.) As you disconnect them, note the position of each connector.

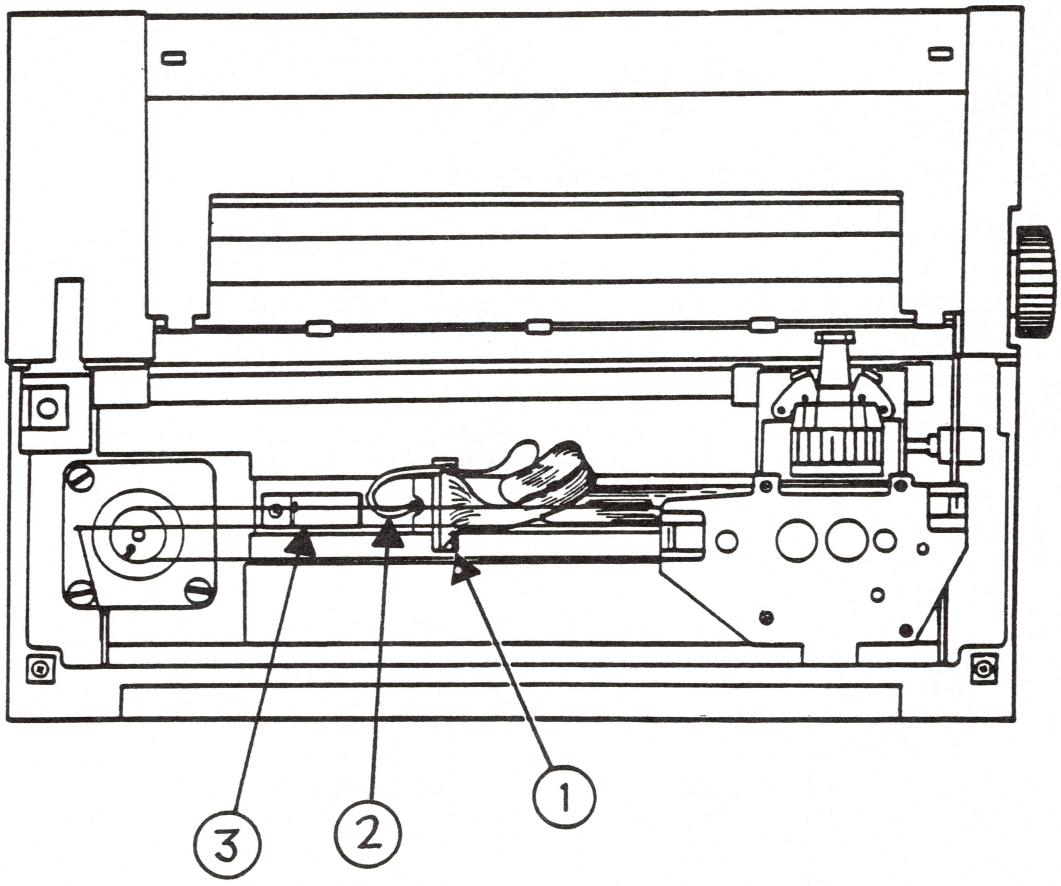

FIGURE 3

CAUTION: THE BOARD CAN BE DAMAGED BY STATIC ELECTRICITY.

13. When you have all the connectors off, lay the board down on a piece of anti-static foam.

14. Slide the grounding strap from the ground lug.

15. To avoid damaging the board, be careful not to handle the surface of the board. Hold it by its edges.

Replace:

1. Line up the board with printer.

2. Connect the grounding strap.

3. Connect all connectors except the dot head connector.

4. Replace the four CPU PC board nuts.

   NOTE: If the board binds, reach around the front and pull the slack out of the dot head cable.

5. Push the bottom panel back into place. Connect the four panel nuts.

6. Turn the printer right side up.

7. Push the dot head connector back into CPU PC board (see Figure 3, #1).

8. Tuck the ground wire (see Figure 3, #2) of the dot head cable under the metal clip (see Figure 3, #3).

9. Fold the dot head cable and push it under the metal clip so that it is on top of the ground wire. Tighten down the metal clip.

10. Slide the carrier back and forth a few times. It should slide freely from end to end. If the carrier catches on the metal clip, go back and re-fold the dot head cable.

11. Replace the carrier cover.

12. Turn the power on.

13. Perform the self-test.

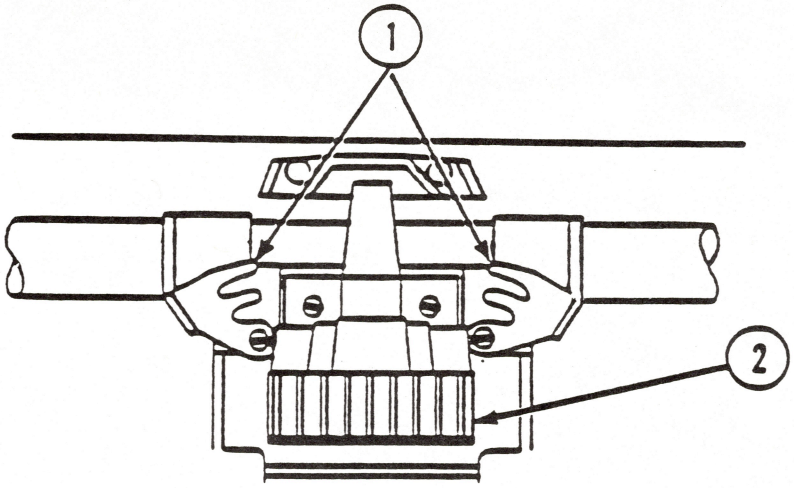

FIGURE 1

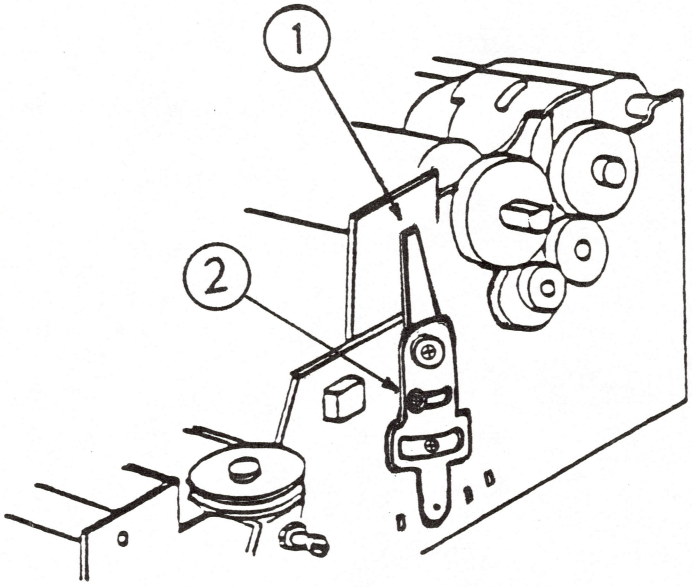

FIGURE 2

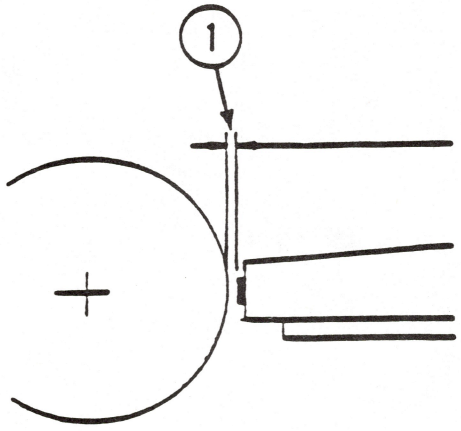

FIGURE 3

F. REMOVE/REPLACE AND ADJUST THE DOT HEAD

Remove:

1. Disconnect the power cord.
2. Remove the carrier cover.
3. Remove the ribbon cartridge (see Section 1A).
4. To free the dot head, slide out both dot head latches (see Figure 1, #1).
5. Pull up the dot head (see Figure 1, #2). If you have trouble getting it out, pull the paper roller shaft forward. Ease the dot head around the roller shaft.

Replace:

1. Push in the dot head. If you have trouble getting it in, pull the paper roller shaft forward. Ease the dot head around the roller shaft.
2. To lock the dot head in place, slide in the two dot head set latches.

Adjust:

1. Run the self test and inspect the print for equal darkness at the top and bottom of the characters. Misadjustment of the dot head gap can cause the tails on lower case "g", "p", and "q" to be weakly printed. Also check the top and bottom of upper case "Z" to see if the bottom line is as dark as the top line.
2. If the print darkness is uneven at the top and bottom of characters, loosen the impression control lever adjustment screw (see Figure 2, #2) and move the impression control lever until the print darkness is equal at the top and bottom of characters. Tighten the screw after adjustment is complete.

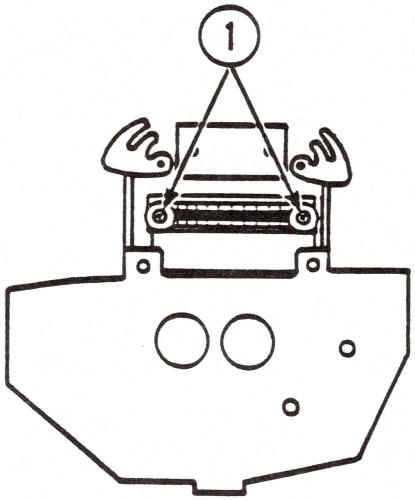

FIGURE 4

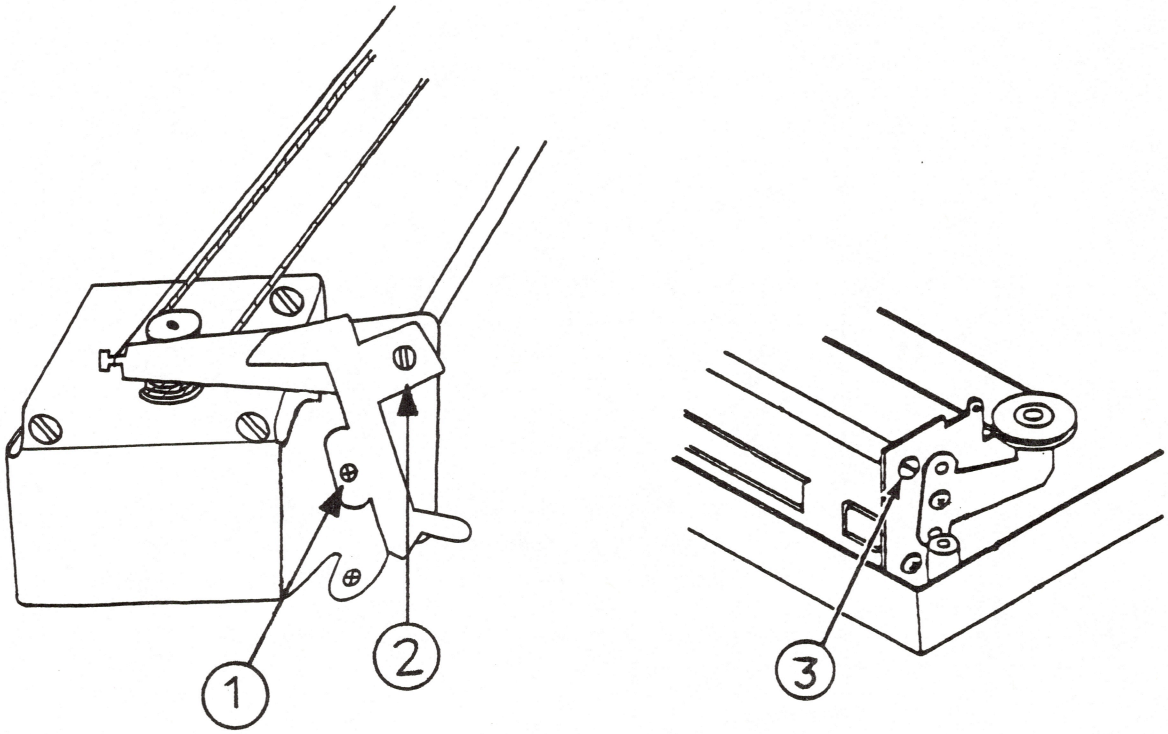

FIGURE 5

G. REMOVE/REPLACE THE CARRIER WIRE

For these procedures you will need:

Small Phillips screwdriver
Small flat blade screwdriver
Needlenose pliers
Adjustable wrench
Tension gauge (Apple PN 077-0014)
Pulley remover tool (Apple PN 076-0043)
Ruler

Remove:

1. Disconnect the power cord.

2. Remove the paper cover and the carrier cover.

3. Remove the switch panel and top cover.

4. Remove two screws from the base of the housing that holds the switch panel connector and set it aside. Remove the ribbon cartridge.

5. Remove the dot head (see Section 2F).

6. Remove the two screws holding the dot head connector (see Figure 4, #1).

7. Lift up the connector and move it out of the way.

8. **(Omit this step for the 15 inch ImageWriter.)** Remove the screw on the left end of the carrier guide shaft (see Figure 5, #1) and set aside the support brace.

9. Remove the screw on the left end of the guide shaft (see Figure 5, #2) and remove the ribbon wire arm.

10. Free both ends of the ribbon wire. Loop the ends over the carrier and tie them together out of the way.

11. Remove the screw on the right end of the shaft (see Figure 5, #3).

12. Pull out the carrier guide shaft.

13. Move the carrier to the right side.

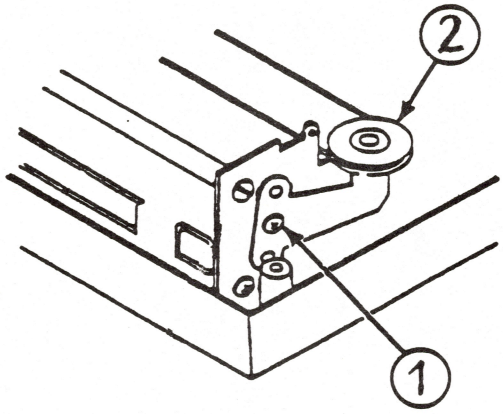

FIGURE 6

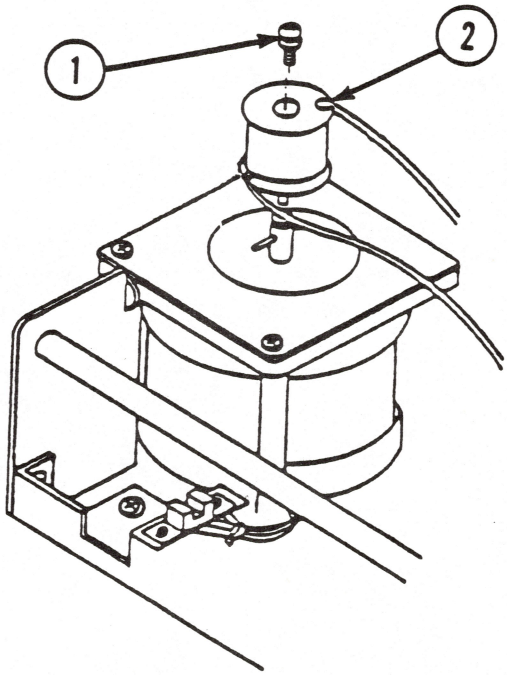

FIGURE 7

14. Use a phillips screwdriver to remove the screw from the top of the motor pulley (see Figure 7, #1).

    NOTE: The pulley can be stopped from turning by holding the carrier in place.

15. Loosen the screw on the tension arm (see Figure 6, #1).

16. Slip off the wire from the idler pulley (see Figure 6, #2).

17. Remove the top end of the carrier wire (see Figure 7, #2).

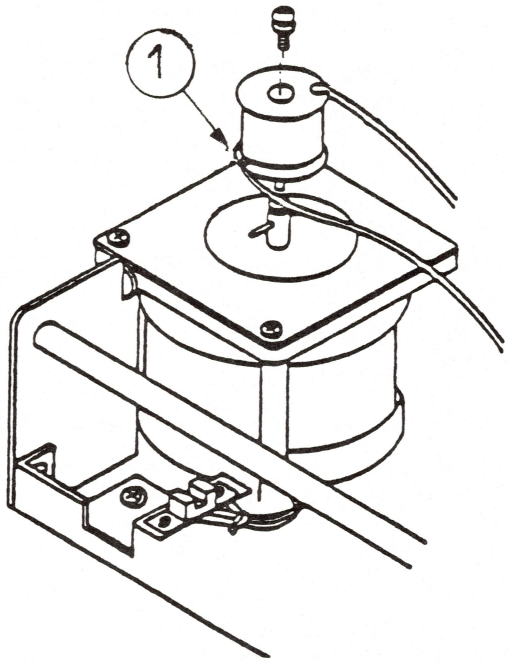

FIGURE 8

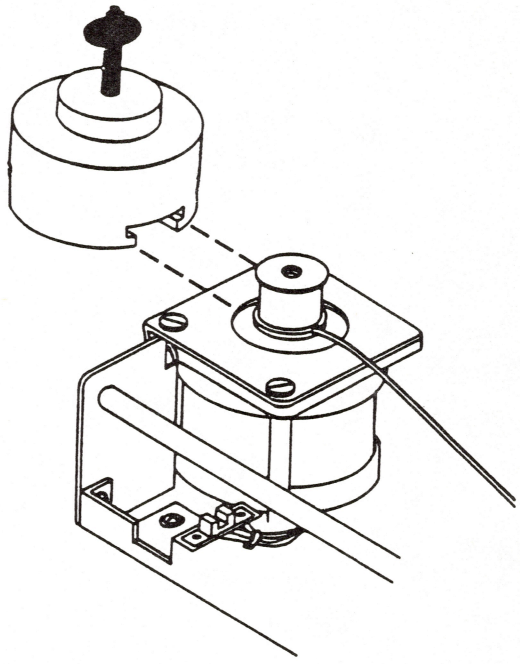

FIGURE 9

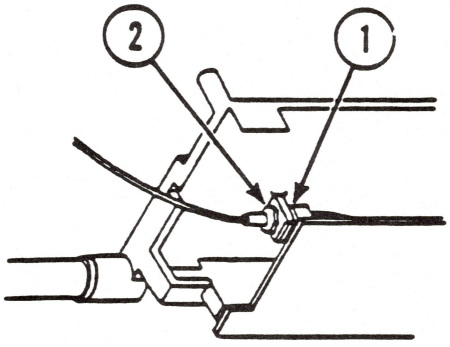

FIGURE 10

18. Use the pulley remover to take off the motor pulley. Slide the pulley remover onto the top of the pulley and turn the screw clockwise until the pulley is free (see Figure 9).

NOTE: At this time, make sure that two copper shims are on the arms of the motor pulley shaft. **(The 15 inch ImageWriter does not use shims.)**

19. Unwind the carrier wire.

20. Remove the bottom end of the carrier wire from the motor pulley (see Figure 8, #1).

21. Lift up the carrier.

22. Using an adjustable wrench, hold the nut on the right side of the carrier wire in place (see Figure 10, #1). Using a needlenose pliers, remove the wire nut on the left side of the carrier wire (see Figure 10, #2).

23. Grab the carrier wire on either side of the black rubber sleeve. Pull out the carrier wire, the nuts, and the sleeve.

NOTE: When you remove the carrier wire, first push out the metal tube which is inside; then the wire, the two nuts, and the black rubber sleeve will all come out together. The wire does not slide out of the two nuts. You must pull the wire, the nuts, and the sleeve out of the slot at the bottom of the carrier assembly.

Replace:

1. Raise up the carrier.

2. Before you insert the new carrier wire, make sure that the long end of the wire runs toward the right side of the printer.

3. Push the black rubber sleeve and metal tube back into the slot at the bottom of the carrier assembly. Tighten the wire nut.

4. Take the long end of the wire and wrap it around the idler pulley. The idler pulley is on the far right side of the printer.

5. Work the long end of the wire under the carrier assembly until it reaches the left side of the printer.

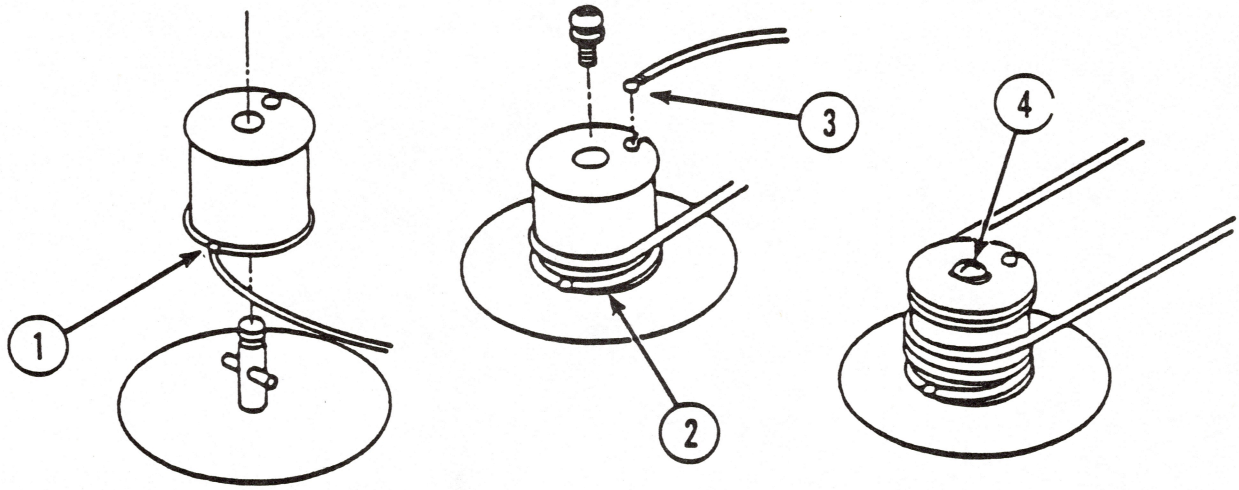

FIGURE 11

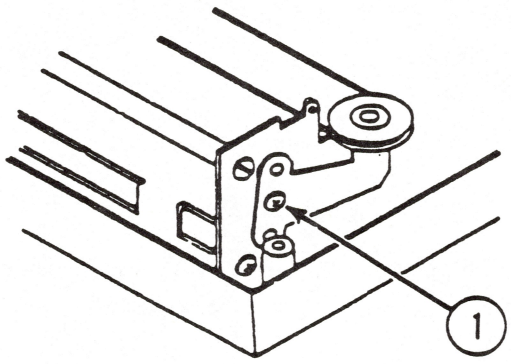

FIGURE 12

6. Insert the long end of the wire into the bottom slot on the motor pulley (see Figure 11, #1).

7. Make sure that the two copper shims are still on the arms of the motor pulley shaft. **(Shims are not used on the 15 inch ImageWriter.)**

8. Seat the motor pulley on the shaft (see Figure 11, #2).

9. Hold the wire snug against the motor pulley with your thumb. Turn the pulley in a clockwise direction and wind up the carrier wire.

10. **(For the 15 inch ImageWriter only, wrap the carrier wire around the left hand pulley before you continue.)** Insert the short end of the wire into the top slot of the motor pulley (see Figure 11, #3).

11. Wrap the wire around the pulley in a clockwise direction.

12. Replace the motor pulley screw (see Figure 11, #4).

13. Tighten the tension screw until the wire is taut (see Figure 12, #1).

14. Replace the front guide rail.

15. Replace the two front guide rail screws and ribbon wire arm. Make sure the brass bushing is properly seated in the carrier assembly.

16. Untie the ribbon wire.

17. Attach the right end of the ribbon wire to the ribbon wire post just above the idler pulley.

18. Attach the left end of the ribbon wire to the ribbon wire post just above the motor pulley.

    NOTE: If the ribbon wire comes off the ribbon pulley gear, you must put it back on. If you have forgotten how, see Section 2D.

19. **(Omit this step for the 15 inch ImageWriter.)** Replace the support brace.

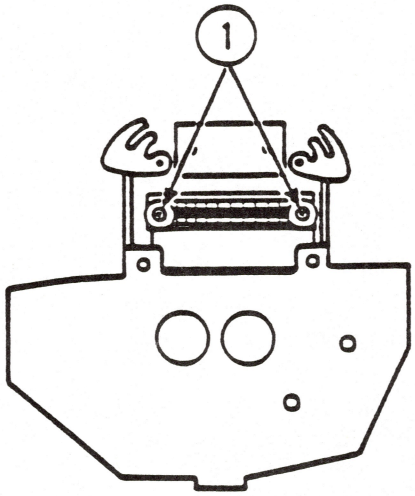

FIGURE 13

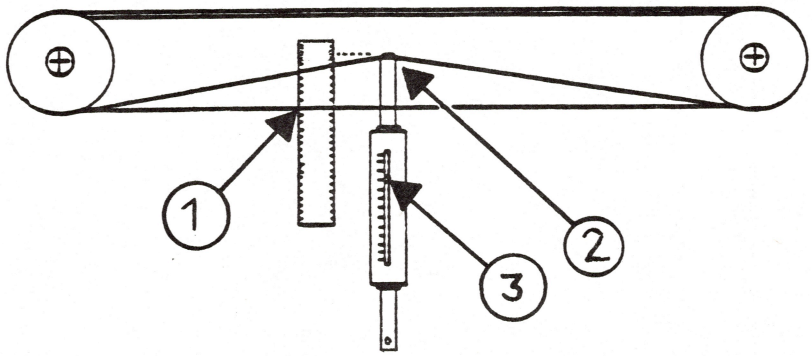

FIGURE 14

20. Replace the housing that holds the switch panel connector.

21. Replace the dot head connector (see Figure 13, #1).

22. Replace the dot head (see Section 2F).

23. Lay a ruler under the front edge of the carrier wire **(use the rear edge for the 15 inch ImageWriter)** and visually mark the point where the carrier wire crosses the ruler (see Figure 14, #1). With the carriage assembly at the far left, push the carrier wire at its center with a tension gauge (see Figure 14, #2).

24. When the wire has been pushed 3/8 of an inch away from its original position, check the tension gauge (see Figure 14, #3). It should read 1 lb. If it doesn't, adjust the screw of the tension arm and recheck.

25. Replace the top cover, switch panel, carrier cover, and the paper cover. Load paper and a ribbon cassette.

26. Run the self-test.

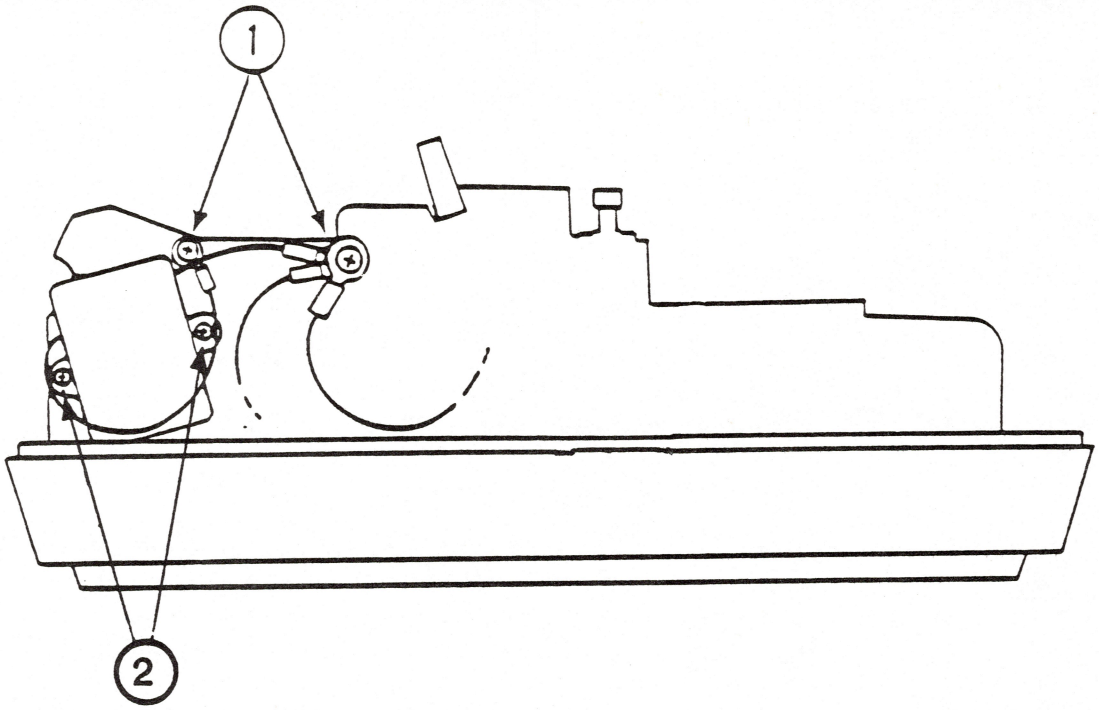

FIGURE 1

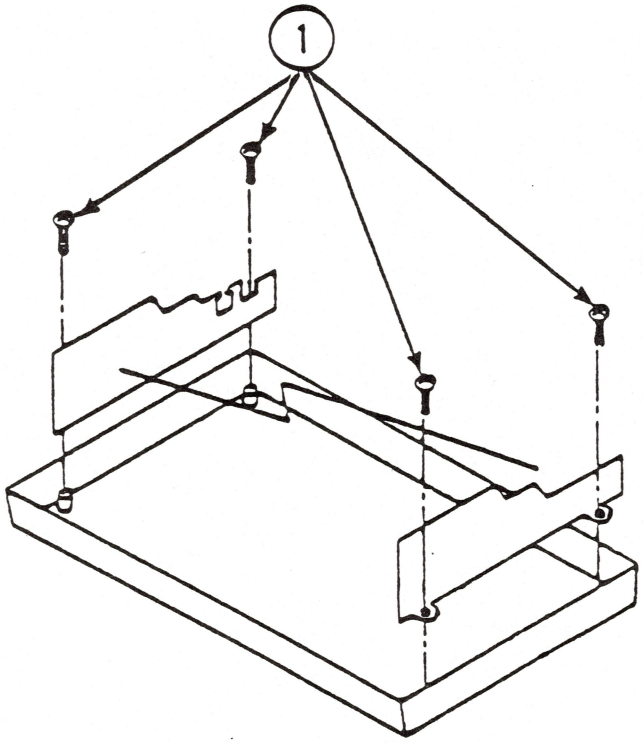

FIGURE 2

H. REMOVE AND REPLACE THE MECHANICAL ASSEMBLY

(For 15 inch ImageWriter, refer to Section 5H.)

For these procedures you will need:

Small phillips screwdriver
5.5 mm Nutdriver
7 mm Nutdriver

Remove

1. Disconnect the power cord.
2. Remove the paper cover, carrier cover, and top cover.
3. Remove the CPU board (see Section 2E).
4. Remove the screw and washers holding ground straps to the side frame (see Figure 1, #1).
5. Remove the two screws from the noise filter (see Figure 1, #2).
6. Gently pull the noise filter away from the frame.
7. Remove the two screws that fasten the power switch housing.
8. To free the mechanical assembly, remove the four screws holding it to the bottom cover (see Figure 2, #1).
9. Lift the mechanical assembly out of the bottom cover.

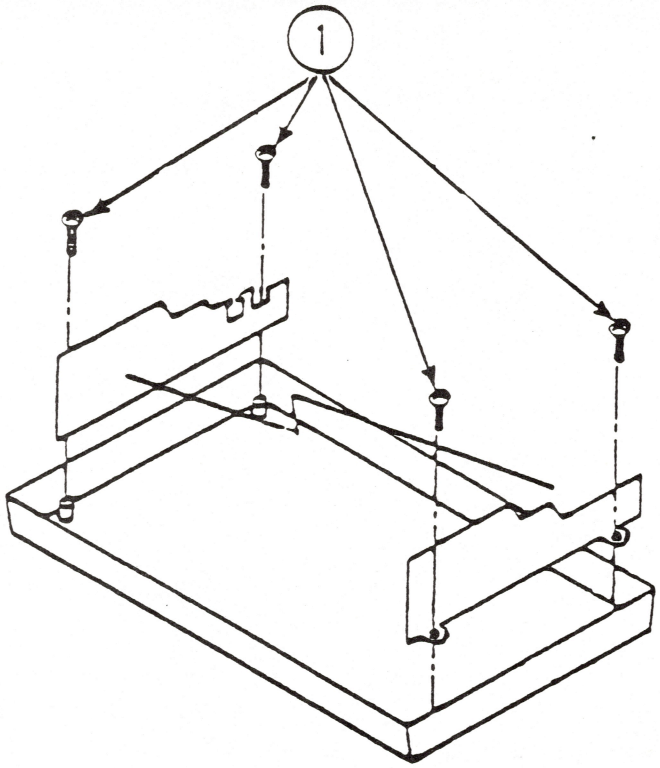

FIGURE 3

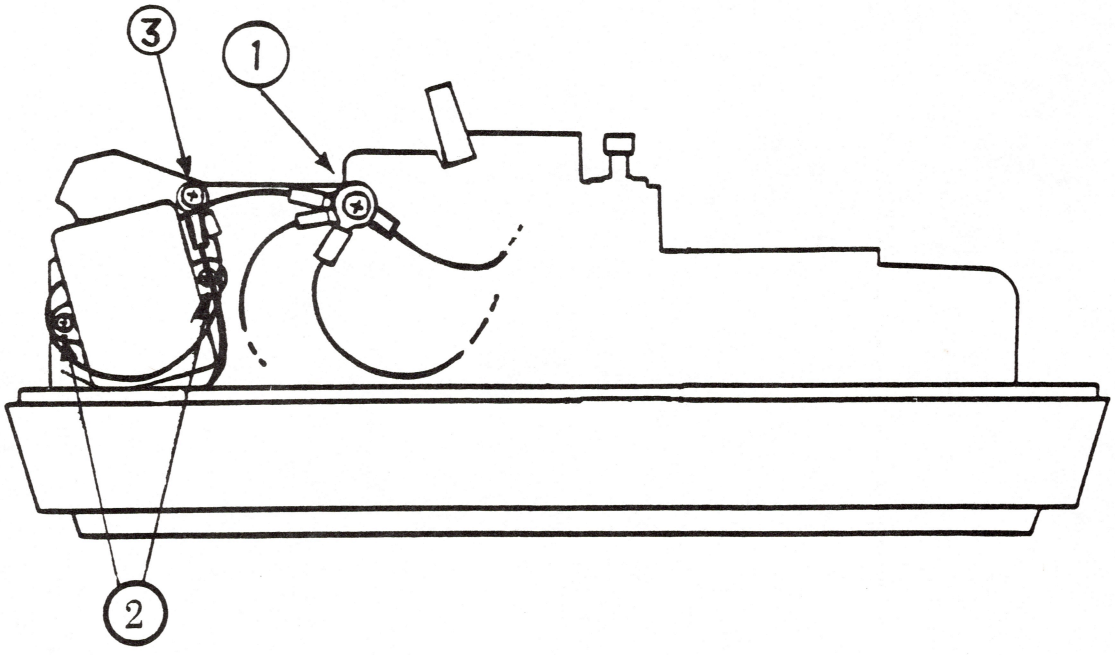

FIGURE 4

Replace

1. Put the mechanical assembly back into the bottom cover.
2. Replace the four screws (see Figure 3, #1).
3. Position the noise filter on the frame. It goes at an angle (see Figure 4, #2).
4. Replace the noise filter screws.
5. Put together the screw, washer, four ground cables, and star washer (see Figure 4, #1). Screw them into the side frame. Do the same with the other two ground cable (see Figure 4, #3).
6. Replace the CPU board (see Section 2E).
7. Replace the power switch housing.
8. Replace the top cover, carrier cover, and paper cover.
9. Load paper and ribbon cartridge.
10. Power on and perform the self-test.

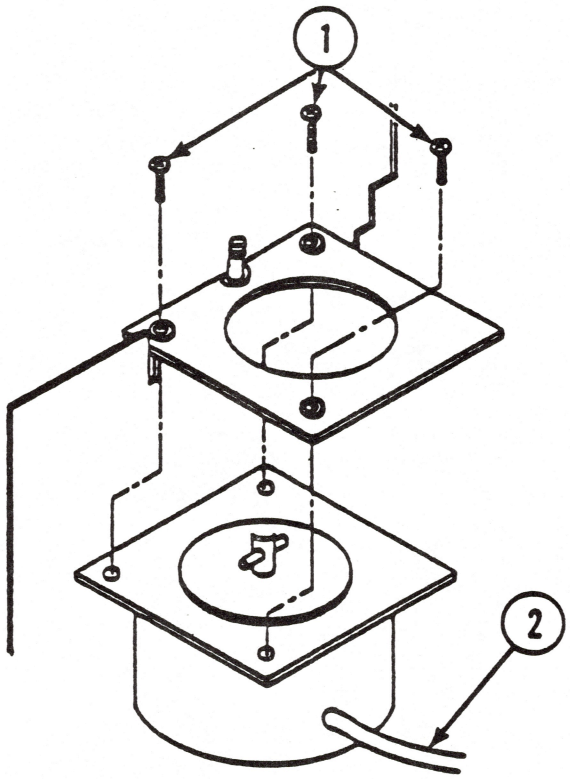

FIGURE 3

I. REMOVE AND REPLACE THE CARRIER MOTOR

(For 15 inch ImageWriter, refer to Section 5I.)

For these procedures you will need:

Medium flat blade screwdriver
Phillips screwdriver
Pulley remover

Remove:

1. Make sure the power is off.
2. Remove the mechanical assembly from the bottom cover.
3. Loosen the ribbon wire tension arm.
4. Free the ribbon wire from the two ribbon wire posts.
5. Tie the wire in a loose knot over the carrier.
6. Remove the motor pulley (see Section 2G).
7. Remove the three motor mounting screws (see Figure 3, #1).

   NOTE: When you remove the last screw, the motor will drop out of the mechanical assembly. As you remove the last screw, hold on to the motor. Carefully note the position of the motor cable (see Figure 3, #2). Then let the motor fall free.

Replace:

1. From the front side of the mechanical assembly, put the motor in its slot. Make sure the cable is on the right side of the motor. It should be pointing in the general direction of the idler pulley.
2. Replace the three motor mounting screws. Do not over-tighten them.
3. Replace the motor pulley. If you have forgotten how, see Section 2G.
4. Put the motor pulley back on the motor.
5. Replace the motor pulley screw.
6. Untie the ribbon wire.
7. Fix the ribbon wire to the ribbon wire posts.

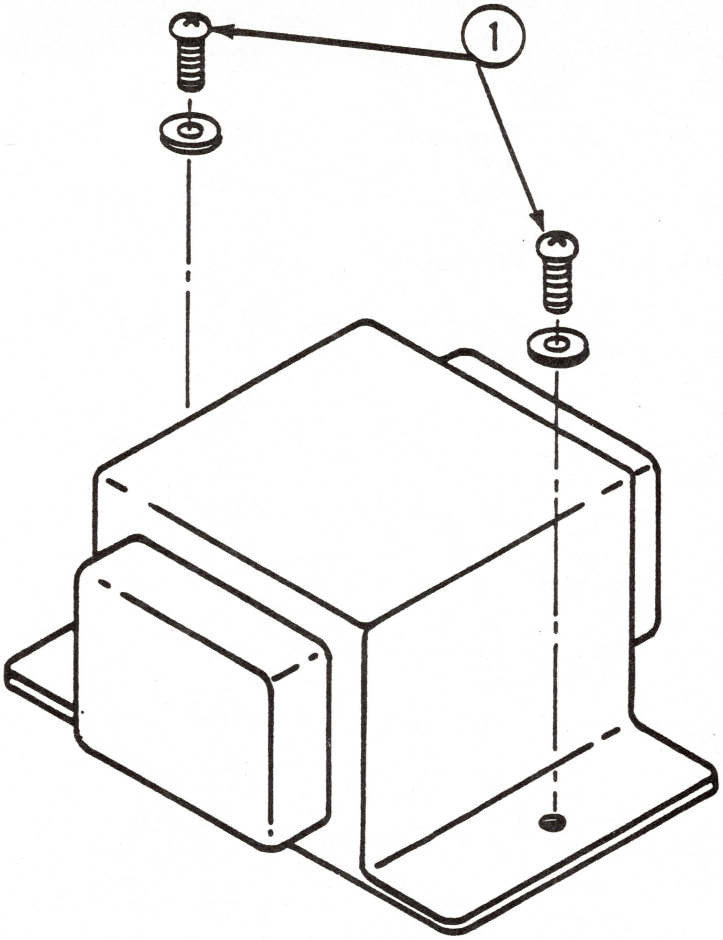

FIGURE 1

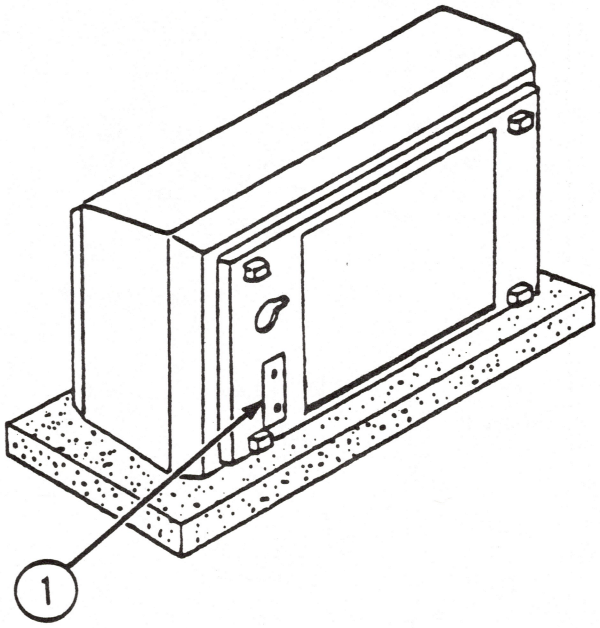

FIGURE 2

8. Tighten the ribbon wire arm.

9. Put the mechanical assembly back into the bottom cover and replace the four screws.

10. Power on and run the self test.

J. REMOVE AND REPLACE THE TRANSFORMER

For these procedures you will need:

Needlenose pliers
Small Phillips screwdriver

Remove:

1. Remove the mechanical assembly (see Section 2H).

2. Remove the two screws from the transformer (see Figure 1, #1.)

Replace:

1. Make sure the threaded plate under the bottom of the printer is in position (see Figure 2, #1).

2. Put the transformer in place.

3. Screw down the transformer.

4. Put the mechanical assembly back into the bottom cover and replace the four screws.

5. Power on and run the self test.

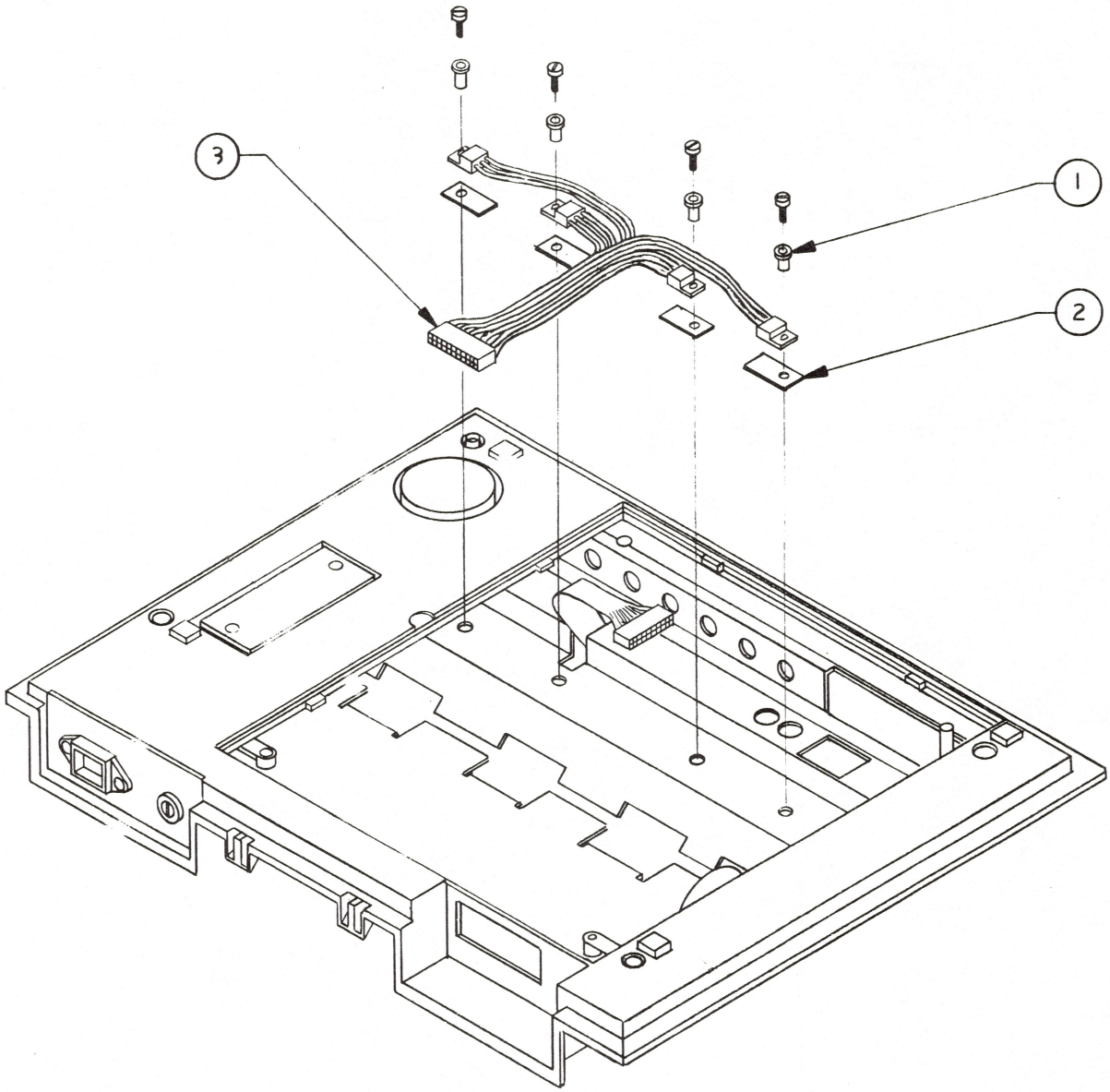

FIGURE 1

K. REMOVE/REPLACE THE CARRIER DRIVE TRANSISTOR ASSEMBLY

For these procedures you will need:

5.5mm nutdriver
7mm nutdriver
Phillips screwdriver
Diagonal cutters

Remove:

1. Remove the CPU PC board as described in this section.

2. Turn the printer upside down. With the CPU PC board removed, locate the carrier drive transistor assembly (Figure 1, #3; includes connector, cable, and four transistors).

3. Use the Phillips screwdriver to remove the four Carrier Drive transistors.

   IMPORTANT: Save the plastic insulators (Figure 1, #2), the washers (Figure 1, #1), and the screws. DO NOT INSTALL THEM ON THE RETURN MODULE.

4. Cut the cable tie holding the assembly to the frame.

Replace:

1. Position the printer so that it is upside down with the power plug receptacle pointed towards you. Position a plastic insulator between each transistor and the printer frame so that no part of the transistor contacts the frame.

   WARNING: Contact between a transistor and the frame can cause the transistor to blow.

   Install the transistors as follows:

   transistor with black lead - far left
   transistor with white lead - left center
   transistor with yellow lead - right center
   transistor with orange lead - far right

2. Reinstall the CPU PC board as described in this section.

ImageWriter Technical Procedures

Section 3

Troubleshooting

Contents:

NOTE: The ImageWriter printer should be tested with the Apple II Peripherals Diskette. (See **Multi-Product Diagnostics Technical Procedures, Section 1.**)

SYMPTOM TABLE

SYMPTOM	CORRECTIVE ACTIONS
POWER LAMP NOT LIT	1. Check that power is turned on. 2. Check that the power cord is plugged in. 3. Check the power fuse at the back of the printer. If it is burned out, replace it and power on again. If fuse blows a second time, replace components in this order: - CPU PC board - Carrier Motor - Transformer 4. If the fuse is O.K., swap the power cord. 5. Verify that the small screw holder is in place under the screw that mounts the printer cable to the logic board. If the screw holder is missing, it may have dropped free and be shorting pins. Carefully check the logic board and the inside of the printer for this small screw holder. 6. Check the three fuses on the CPU board and replace any that are blown. Verify that the small screw holder holding the screw that mounts the printer cable to the logic board is in place. It may have dropped free and be shorting pins on the logic board. Carefully check the logic board and the inside of the printer for this small screw holder. If this is not the problem and the fuses blow again, replace components in this order: - Power switch - Carrier motor - Transformer

SYMPTOM TABLE

SYMPTOM	CORRECTIVE ACTIONS
POWER LAMP ON BUT PRINTER WON'T PRINT	1. Check that the top cover is seated properly. If it isn't, close it. Then press SEL and try self-test. 2. Check if PE lamp is lit on switch panel. If it is, reload the paper and try self-test. 3. Check the connectors between the carrier and carrier motor and the CPU PC board. If any of the connectors are loose, connect them. Verify that the dot head connector cable is lying flat under the carrier assembly. 4. Verify that the small screw holder is in place under the screw that mounts the printer cable to the logic board. If the screw holder is missing, it may have dropped free and be shorting pins on the logic board. Carefully check the logic board and the inside of the printer for this small screw holder. 5. Replace components in this order: - CPU PC board - Carrier motor

SYMPTOM TABLE

SYMPTOM	CORRECTIVE ACTIONS
PRINTER PASSES SELF-TEST BUT WON'T PRINT UNDER COMPUTER CONTROL	1. Check that the computer is properly powered on and initialized. 2. Check if SEL light is on. If it's off, press SEL and try printing under computer control. If it prints while light is off, replace the switch panel. 3. Make sure that the interface cable between the printer and the computer is connected and secured at both ends. 4. Check ImageWriter User's Manual or Peripherals Interface Guide for correct setting of configuration switches on the printer and the interface card. 5. Replace components in this order: - Apple interface cable - CPU PC board - Carrier drive transistor assembly - Carrier motor
PRINT QUALITY PROBLEM: DOTS MISSING	1. Make sure dot head is in place. 2. Make sure dot head is not clogged with dust or dirt. 3. Make sure dot head connector is plugged properly into CPU PC board. 4. Check impression control lever properly set. Push it away from you to its forwardmost position if using a single sheet of paper. 5. Replace components in this order: - Dot head - CPU PC board

SYMPTOM TABLE

SYMPTOM	CORRECTIVE ACTIONS
PRINT QUALITY PROBLEM: PRINTING TOO LIGHT OR INTENSITY VARIES	1. Check that impression control lever is in the proper position. Push it away from you to its forwardmost position if using a single sheet of paper. 2. Substitute new ribbon cartridge. 3. Check the ribbon wire tension. If too loose, adjust as necessary. 4. Adjust intensity pot located under the clear plastic sheet that covers the configuration switches. Locate VR2 IMPRES and adjust for optimum print density. 5. Replace components in this order: - Ribbon cassette - Dot head - CPU PC board
PRINT QUALITY PROBLEM: HORIZONTAL SPACING IRREGULAR	1. Check if carrier wire is strung properly and within tension specifications. Adjust as necessary. 2. Replace components in this order: - Carrier wire - Carrier drive transistor assembly - Carrier motor - CPU PC board

SYMPTOM TABLE

SYMPTOM	CORRECTIVE ACTIONS
PRINT QUALITY PROBLEMS: CHARACTERS DO NOT ALIGN VERTICALLY IN COLUMNS	1. Locate VR1 ALIGN under the clear plastic sheet that covers the configuration switches. Adjust for optimum vertical alignment. 2. Replace CPU PC board
ERRATIC CARRIER MOTION OR BURNING ODOR	Replace components in this order: - Carrier motor - Carrier drive transistor assembly - CPU PC board
HEXADECIMAL DATA IS PRINTED	Power the printer off, then on.
WILL NOT WIND RIBBONS PROPERLY AND WILL INTERMITTENTLY PRODUCE POOR QUALITY PRINT (LIGHT)	Replace components or verify in this order: - Ribbon cartridge - Verify the positioning of the springs under the carriage mount plate. Be sure the spring with the greater tension is installed under the ratchet 'B' gear. Refer to the **Illustrated Parts List** for the exact location. - Replace the change arm gear. If that does not cure the problem, try another change arm gear.

SYMPTOM TABLE

SYMPTOM	CORRECTIVE ACTIONS
GRINDING NOISE BUT PRINTS OKAY (THIS OFTEN HAPPENS AFTER REPLACING THE CARRIER MOTOR)	**NOTE:** You may have to follow the procedure given below several times before the problem is eliminated. Perform the following: 1. Loosen screws that secure carrier motor clamps. 2. Loosen screws that secure the carrier motor to the case. 3. Cross tighten the screws holding the carrier motor in place until a slight resistance is felt. **DO NOT OVER TIGHTEN.** If it has been overtightened, replace the eight rubber grommets and cross tighten again. 4. Tighten the screws that hold the carrier motor clamps.
R7 ON THE SUPER SERIAL CARD BLOWS	Replace carrier motor transistors. Be sure the mica insulators and screw insulators are in position.
FUSE 5A ON THE CPU PCB BLOWS WHEN CONNECTED TO SUPER SERIAL CARD	Replace fuse and print head.
CARRIER ASSEMBLY GRINDS ON POWER UP	Replace the components in this order: - Carrier motor transistors. Be sure the mica insulators, and screw insulators are in position. - CPU PC board

ImageWriter Technical Procedures

Appendix 3A

Troubleshooting

Flow of Information

Troubleshooting can be approached in many different ways. Apple recommends two methods in particular: logical troubleshooting, and module swapping in a particular order. For printers, the swapping method can prove very frustrating, so logical troubleshooting is especially helpful.

On the following pages you will find a brief description of what happens when you run the self-test on the ImageWriter. When you troubleshoot an ImageWriter, always attempt to run the self-test before connecting the printer to a computer. If the self-test does not run correctly, you can observe where it stops working. Knowing the flow of information, you can then isolate the problem to the faulty module.

One more thing: Before swapping modules check the ribbon cartridge and any mechanical adjustments that are possible. This may not always fix the problem, but it eliminates two possibilities right away.

FLOW OF INFORMATION

Below is a block diagram of an ImageWriter printer. The numbers on the block diagram indicate the order of events during the self-test and correspond to the numbers in the descriptions.

IMAGEWRITER (Serial)

Flow of Information During Self Test

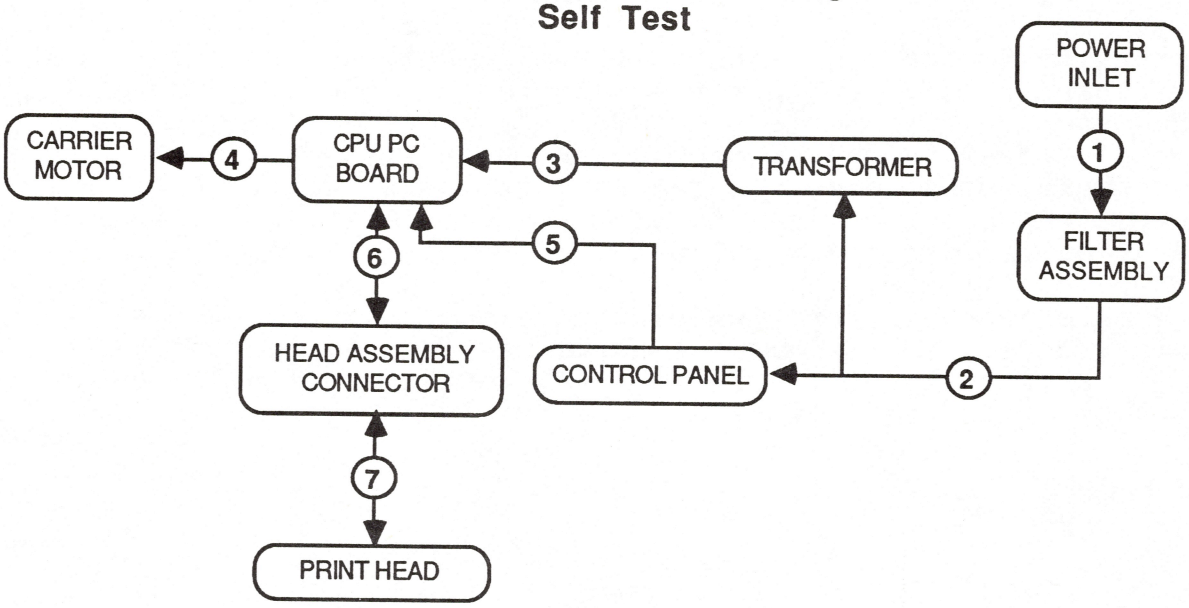

NOTE

The above information is the same for the Dot Matrix Printer (Parallel)

1. The AC power connector is plugged into the power inlet on the rear of the printer.

2. The power switch on the control panel is turned on and the form feed switch is held down. The AC voltage and current is passed through the filter to reduce Radio Frequency Interference (RFI) to FCC standards. The 120 volts is sent to the transformer where it is reduced to 40 volts.

3. The CPU PC board has two areas:

   a. The power supply area, where the 40 volts from the transformer is broken down further and sent to various parts which need it.

   b. The CPU area, which contains the microprocessor electronics.

   The power supply area sends the necessary voltages to the CPU area and the startup sequence is accessed. The startup sequence then notifies the power supply that the CPU is ready.

4. The power supply area accesses the carrier motor. The carrier motor places the carrier assembly at the left side of the platen. The carrier motor moves the carrier assembly back and forth when printing.

5. The form feed switch on the control panel is released, notifying the CPU area that the self-test is to be performed. The CPU notifies the power supply that the self-test is to be performed. The power supply notifies the carrier motor.

6. The CPU area sends the self-test information to the head assembly connector mounted underneath the carrier assembly.

7. The head assembly connector activates the print head. The self-test is performed. The printer will continue running the self-test until powered off.

ImageWriter Technical Procedures

Section 4

Illustrated Parts List

The figures and lists below include all piece parts that can be purchased separately from Apple for the ImageWriter, along with their part numbers. These are the only parts available from Apple. Refer to your Apple Service Programs manual for prices.

Contents:

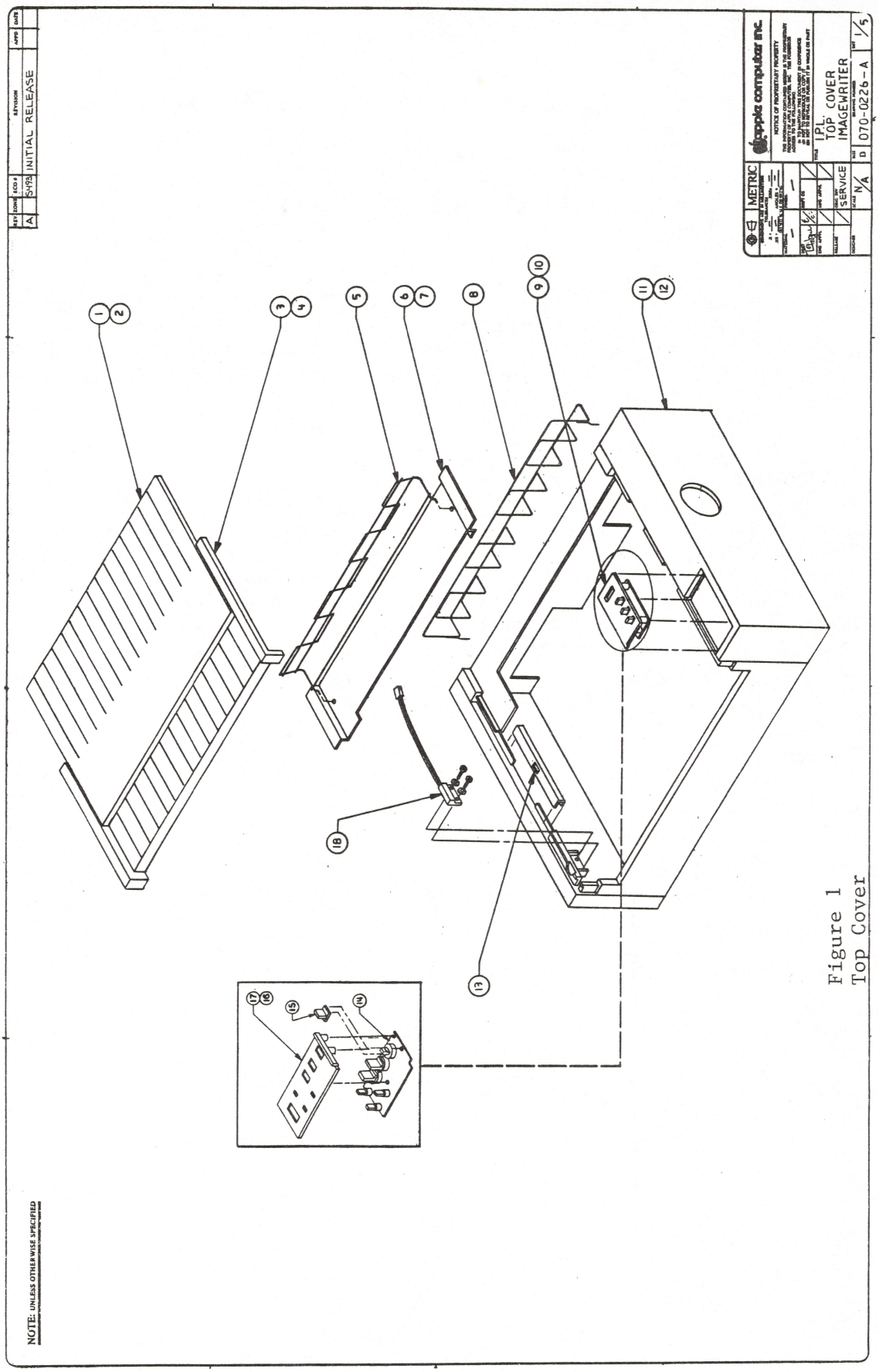

Figure 1
Top Cover

IMAGEWRITER - TOP COVER (Figure 1)

Item	Part No.	Description
1	970-0642	Cover Assembly, Print
2	970-0856	Cover Assembly, Print - 15"
3	970-0641	Cover Assembly, Carrier
4	970-0857	Cover Assembly, Carrier - 15"
5	970-0896	Rack, Paper Stand - 15"
6	970-0643	Cover Assembly, Paper
7	970-0861	Cover Assembly, Paper - 15"
8	970-0895	Rack, Paper Separator - 15"
9	970-0601	Switch, Panel 110V (& 15")
10	970-0599	Switch, Panel 220V (& 15")
11	970-0640	Cover Assembly, Top
12	970-0859	Cover Assembly, Top - 15"
13	970-0648	Side Plate, Friction Release (& 15")
14	970-0866	PCB, Control Panel (& 15")
15	970-0835	Cap, Control Panel Switch (& 15")
16	970-0636	Control Panel, 110V (& 15")
17	970-0644	Control Panel, 220V (& 15")
18	970-0647	Switch, Magnetic Reed (& 15")

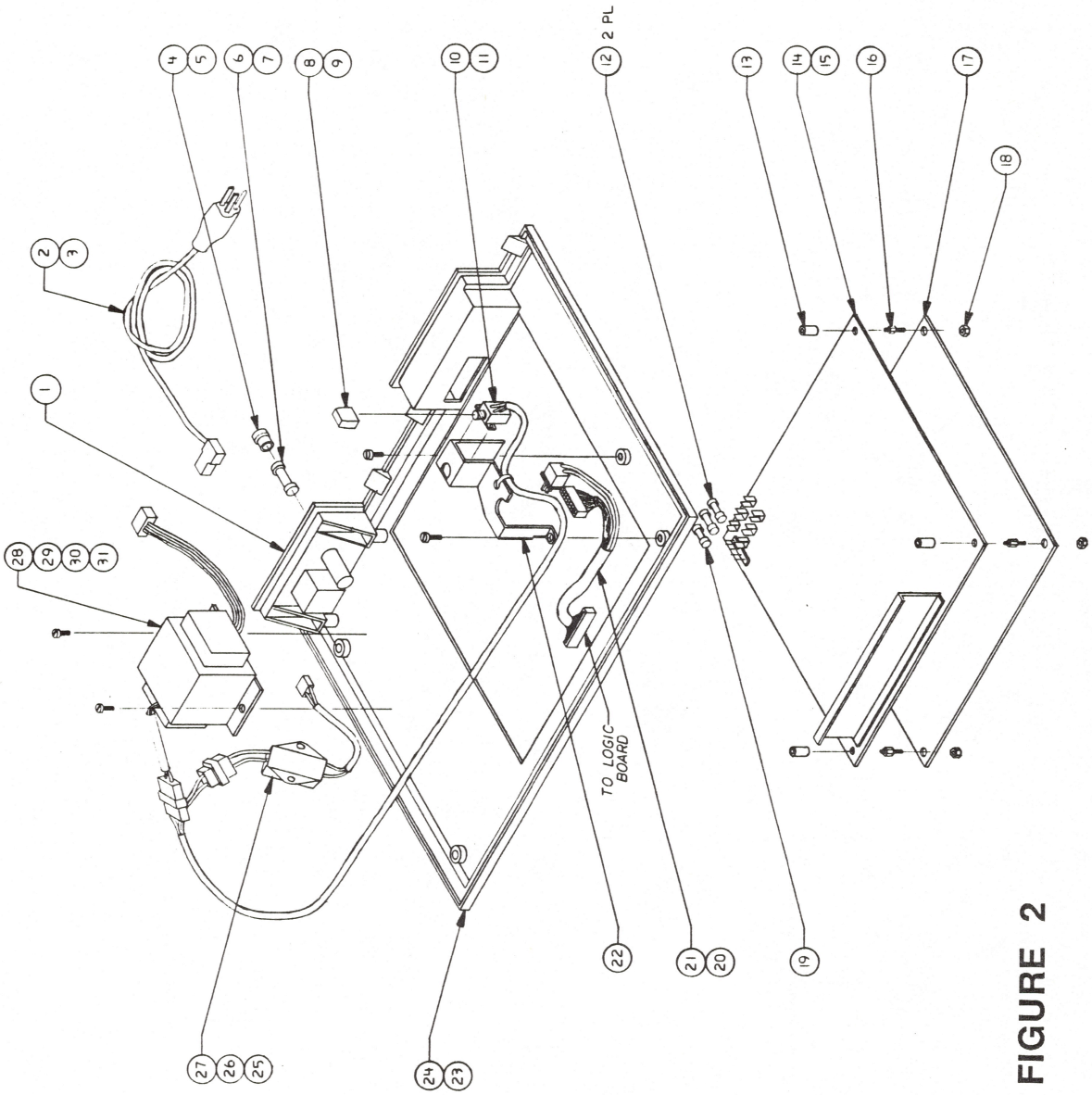
1
2
3
4
5
6
7
8
9
10
11
12 2 PL
13
14
15
16
17
18
19
20
21
22
23
24
25
26
27
28
29
30
31
TO LOGIC BOARD

FIGURE 2

IMAGEWRITER - BOTTOM COVER (Figure 2)

Item	Part No.	Description
1	970-0650	Panel, Connector (& 15")
2	970-0635	Power Cord, 110V (& 15")
3	970-0710	Power Cord, 220V (& 15")
4	970-0712	Cap, Fuse, 110V (& 15")
5	970-0713	Cap, Fuse, 220V (& 15")
6	740-0101	Fuse, 2 Amp, 250V (& 15")
7	740-0100	Fuse, 1 Amp, 250V (& 15")
8	970-0649	Cap, Power Switch
9	970-0840	Cap, Power Switch - 15"
10	970-0598	Switch, Power
11	970-0817	Switch, Power - 15"
12	740-0021	Fuse, 3.15 Amp 250V (& 15")
13	970-0720	Stand Off, PCB Mounting (& 15")
14	661-75144	Main Logic PCB
15	661-75199	Main Logic PCB - 15"
16	970-0716	Support Screw, PCB Stand Off (& 15")
17	970-0633	Plate, Bottom (& 15")
18	970-0717	Nut, PCB Stand Off (& 15")
19	740-0022	Fuse, 5 Amp 250V (& 15")
20	970-0715	Cable Assembly, Power Switch/Control Panel
21	970-0867	Cable Assembly, Power Switch/Control Panel - 15"
22	970-0831	Bracket, Power Switch/Cable Mounting - 15"
23	970-0639	Cover Assembly, Bottom
24	970-0860	Cover Assembly, Bottom - 15"
25	970-0711	Filter, Noise, 220V
26	970-0868	Filter, Noise, 110V - 15"
27	970-0898	Filter, Noise, 220V - 15"
28	970-0634	Transformer, 110V
29	970-0645	Transformer, 220V
30	970-0865	Transformer, 110V - 15"
31	970-0897	Transformer, 220V - 15"

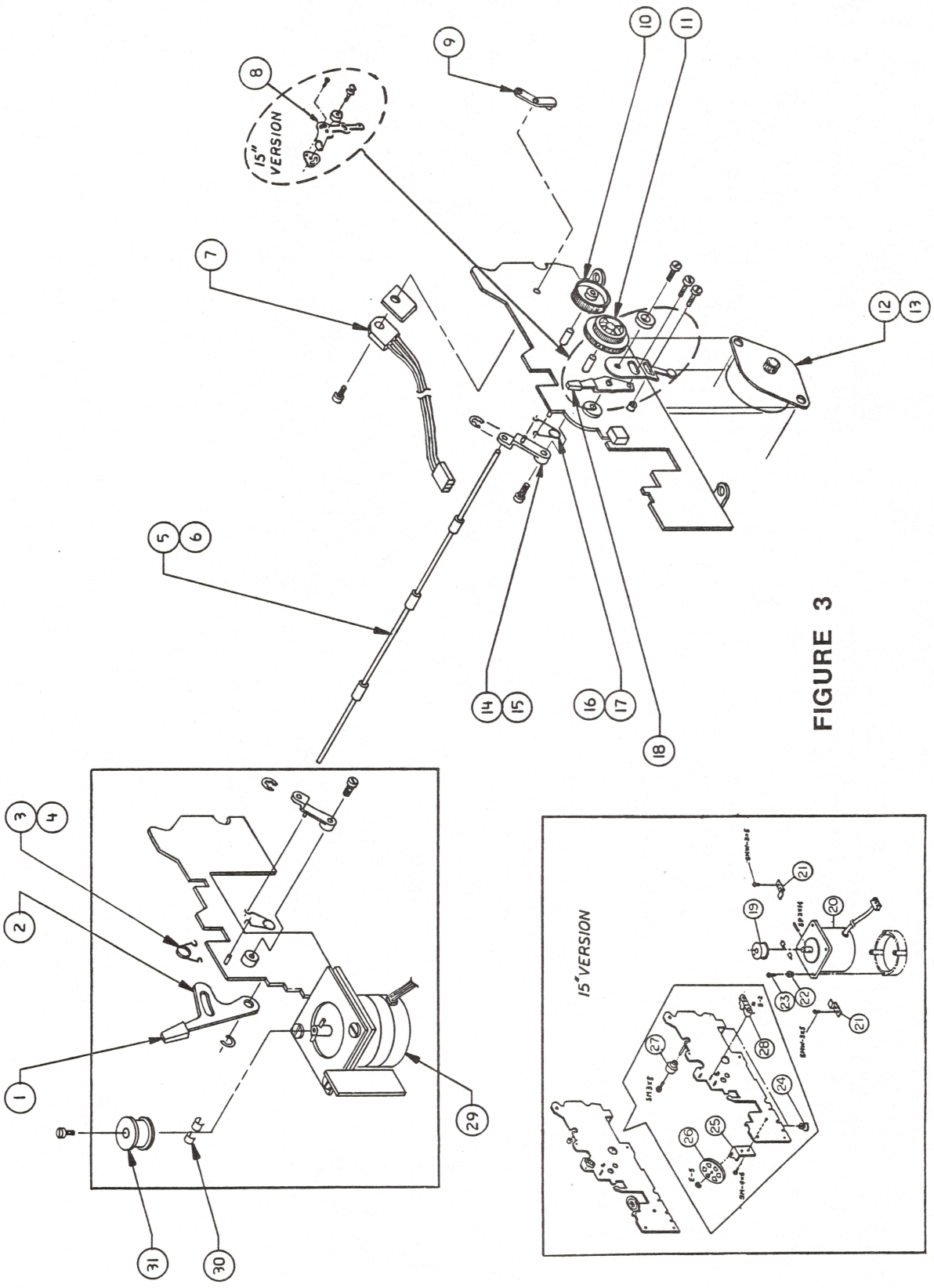

FIGURE 3

IMAGEWRITER - MAIN FRAME (Figure 3)

Item	Part No.	Description
1	970-0839	Cap, Feed Roller Release - 15"
2	970-0850	Lever, Feed Roller - 15"
3	970-0056	Spring, Feed Roller Release
4	970-0832	Spring, Feed Roller Release - 15"
5	699-0110	Shaft Assembly, Paper Bail
6	970-0858	Shaft Assembly, Paper Bail - 15"
7	970-0082	Transistor Assembly, 5V (&15")
8	970-0829	Lever, Impression Control - 15"
9	970-0830	Plate, PCB Support - 15"
10	970-0051	Gear, Idler, Tractor (& 15")
11	970-0052	Gear, Idler, Platen (& 15")
12		Motor, Paper Feed: use 970-0851
13	970-0851	Motor, Paper Feed - 15"
14	970-0838	Arm, Paper Bail (Right) - 15"
15	970-0977	Arm, Paper Bail
16	970-0054	Spring, Paper Bail
17	970-0833	Spring, Paper Bail - 15"
18	970-0638	Cap, Lever Set
19	970-0841	Pulley, Carrier Motor - 15"
20	970-0845	Motor, Carrier - 15"
21	970-0828	Clamp, Carrier Motor - 15"
22	970-0849	Grommet, Carrier Motor, Rubber - 15"
23	970-0822	Screw, Carrier Motor Release - 15"
24	970-0847	Foot, Rubber - 15"
25	970-0853	Pulley, Carrier Holder - 15"
26	970-0837	Pulley, Idler - 15"
27	970-0874	Foot, Rubber Stop - 15"
28	949-0050	Arm, Paper Bail (Left) - 15"
29	970-0630	Motor, Carrier
30	970-0081	Shim, Motor Shaft (& 15")
31	970-0053	Pulley, Motor

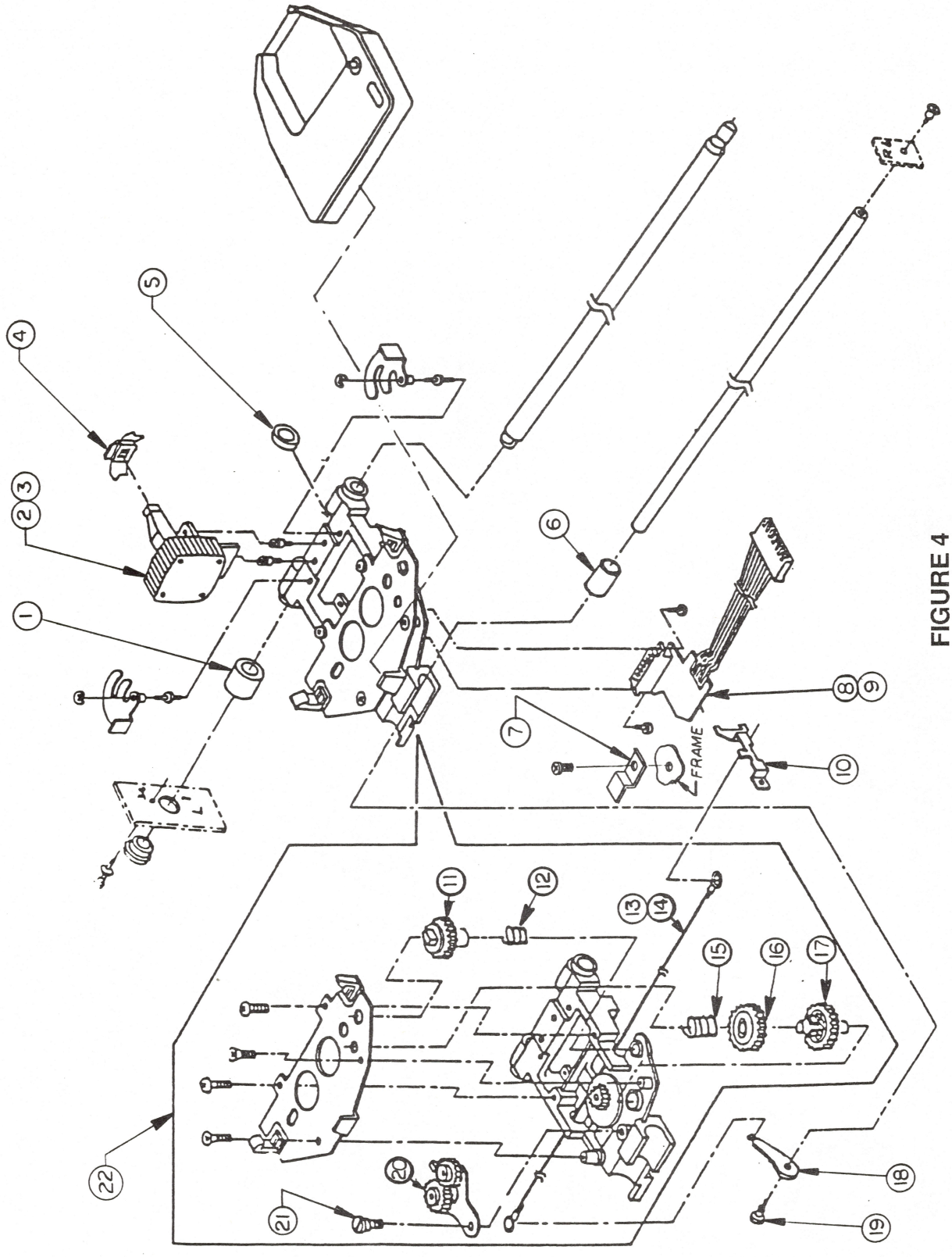

FIGURE 4

IMAGEWRITER - PRINT HEAD ASSEMBLY (Figure 4)

Item	Part No.	Description
1	970-0848	Stopper, Carrier - 15"
2	661-0315	Print Head, U.S. (& 15")
3	699-0113	Print Head, Europe (& 15")
4	970-0059	Guide, Ribbon (& 15")
5	970-0067	Wiper, Felt (& 15")
6	970-0842	Bearing, Carrier Assembly - 15"
7	970-0827	Retainer, Connector Cable (& 15")
8	699-0113	Connector Assembly, Head
9	970-0862	Connector Assembly, Head - 15"
10	970-0826	Bracket, Connector Holder (& 15")
11	970-0061	Gear, Ratchet 'A' (& 15")
12	970-0063	Spring, Ratchet Gear (& 15")
13	970-0066	Wire, Ribbon Drive
14	970-0844	Wire, Ribbon Drive - 15"
15	970-0064	Spring, Drive Gear (& 15")
16	970-0060	Gear, Ribbon Drive (& 15")
17	970-0062	Gear, Ratchet 'B' (& 15")
18	970-0825	Arm, Ribbon Drive Wire (& 15")
19	970-0875	Screw, Shoulder (& 15")
20	970-0065	Gear, Change Arm (& 15")
21	970-0719	Screw, Shoulder (& 15")
22	076-0244	Carrier Frame Assembly

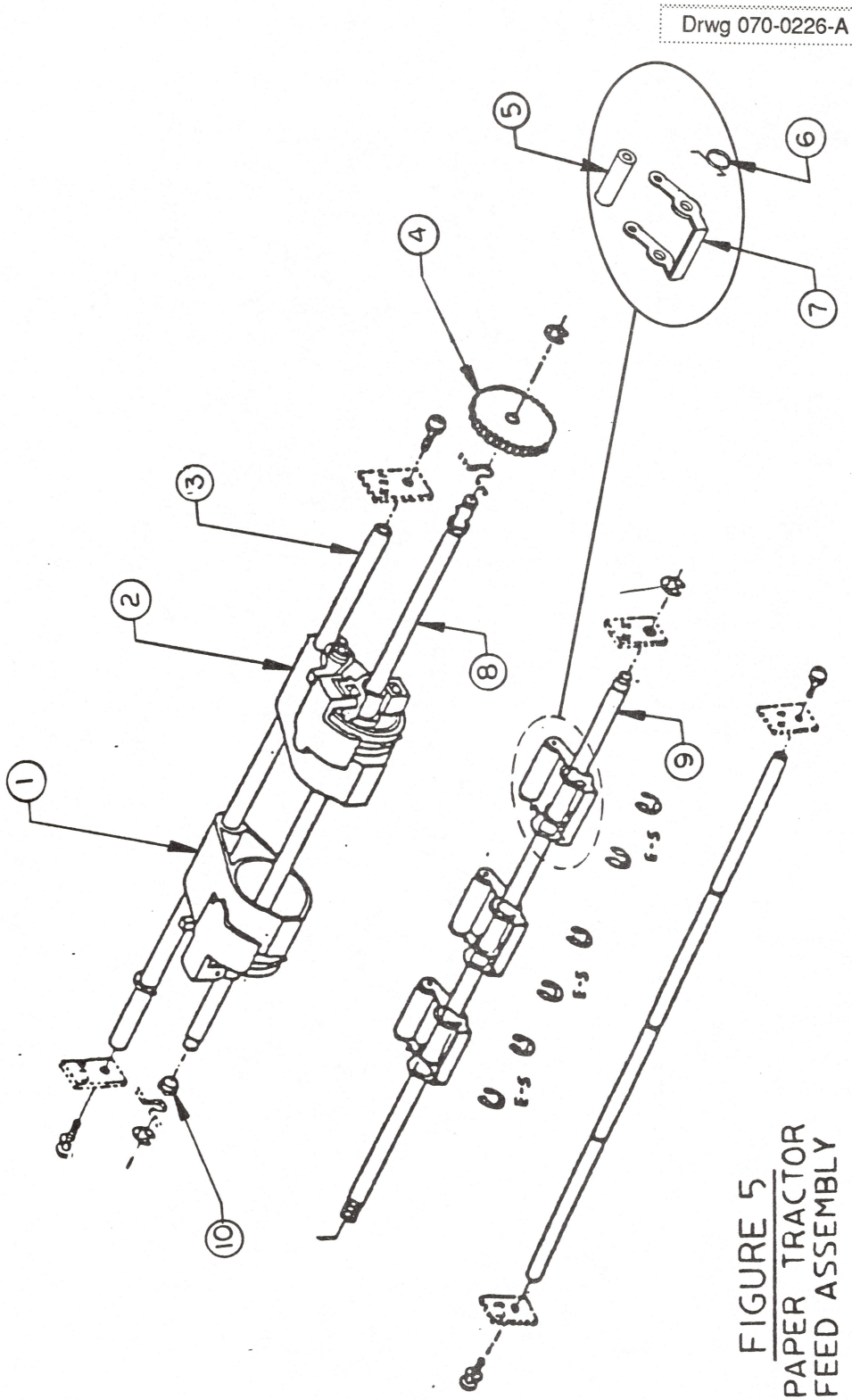

FIGURE 5
PAPER TRACTOR
FEED ASSEMBLY

IMAGEWRITER - PAPER TRACTOR FEED ASSEMBLY (Figure 5)

Item	Part No.	Description
1	970-0631	Sprocket, Left (& 15")
2	970-0632	Sprocket, Right (& 15")
3	970-0819	Shaft, Tractor Feed Support - 15"
4	970-0057	Gear, Tractor Feed (& 15")
5	970-0058	Feed Roller (& 15")
6	970-0055	Spring, Feed Roller (& 15")
7	970-0823	Arm, Feed Roller Support (& 15")
8	970-0820	Shaft, Tractor Feed Drive - 15"
9	970-0821	Shaft, Platen Feed Roller - 15"
10	970-0834	Cam, Feed Roller Shaft (& 15")

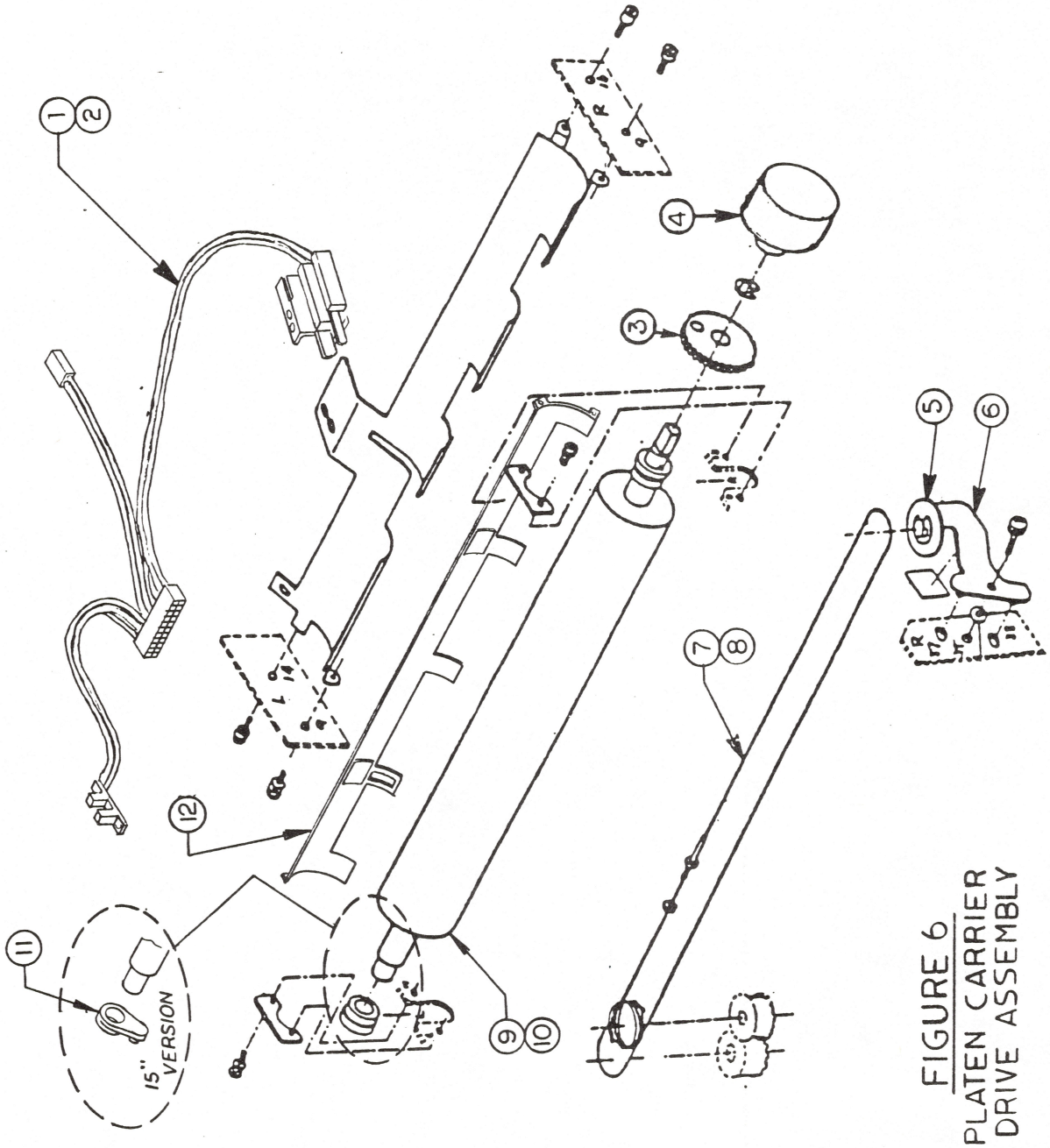

FIGURE 6
PLATEN CARRIER
DRIVE ASSEMBLY

IMAGEWRITER, PLATEN CARRIER DRIVE ASSEMBLY (Figure 6)

Item	Part No.	Description
1	970-0637	Sensor Assembly, OOP/EOT/Cover Interlock
2	970-0864	Sensor Assembly, OOP/EOT/Cover Interlock - 15"
3	970-0069	Gear, Platen (& 15")
4	970-0600	Knob, Platen (& 15")
5	970-0070	Arm, Carrier Wire Tension
6	970-0854	Arm, Carrier Wire Tension - 15"
7	970-0080	Wire, Carrier
8	970-0818	Wire, Carrier - 15"
9	970-0068	Platen Core, Rubber
10	970-0846	Platen Core, Rubber - 15"
11	970-0836	Bearing, Platen Holder - 15"
12	970-0982	Cradle, Platen Guide
	970-0855	Cradle, Platen Guide - 15"

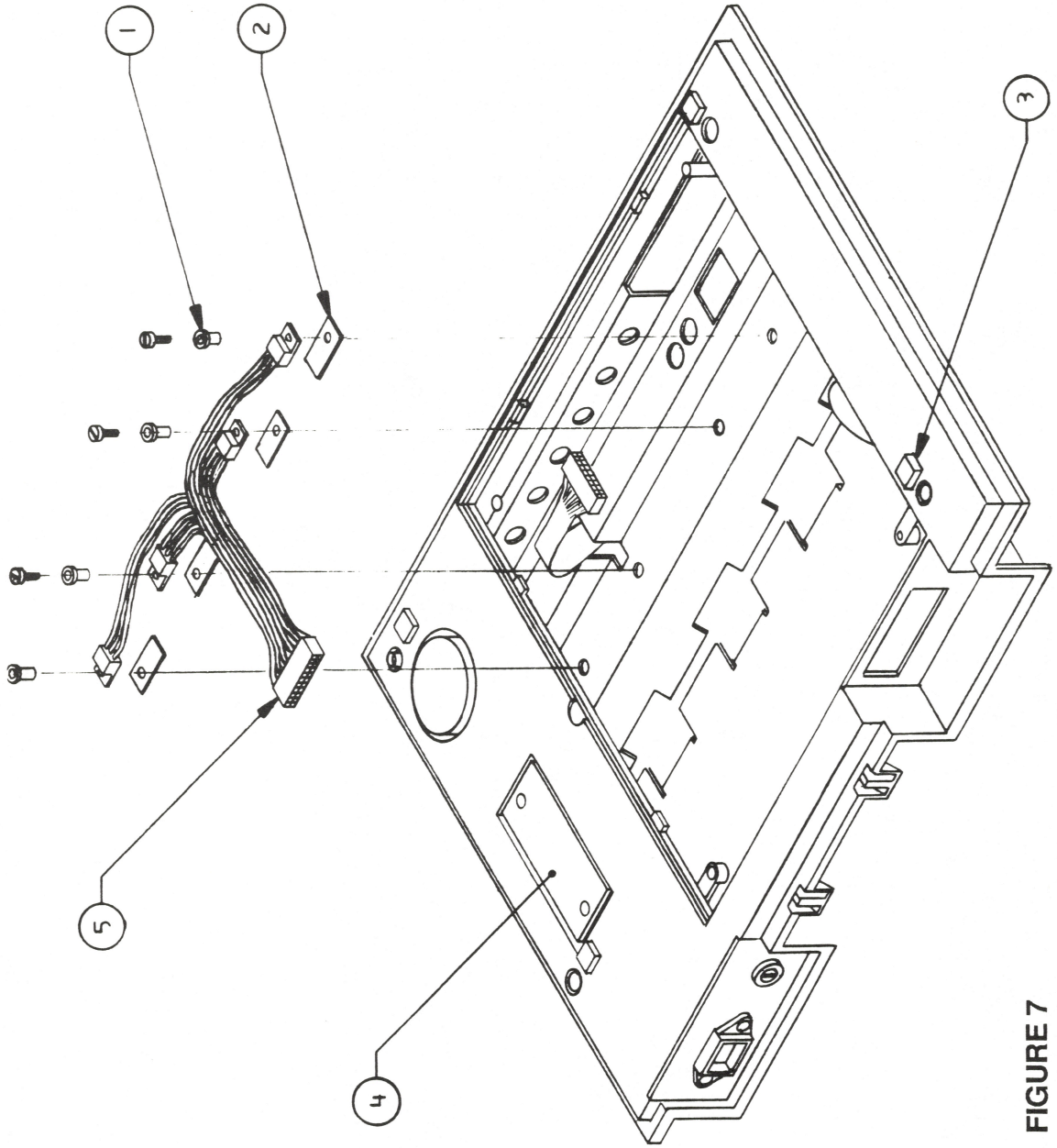

FIGURE 7

IMAGEWRITER - BOTTOM VIEW (Figure 7)

Item	Part No.	Description
1	860-0034	Washer, Shoulder Nylon (& 15")
2	725-0006	Insulator, Silicon Rubber (& 15")
3	970-0714	Foot, Rubber
4	970-0824	Plate, Transformer Cover (& 15")
5	699-0120	Transistor Assembly, Carrier Drive

15 Inch ImageWriter Technical Procedures

Section 5

Take-Apart

Contents:

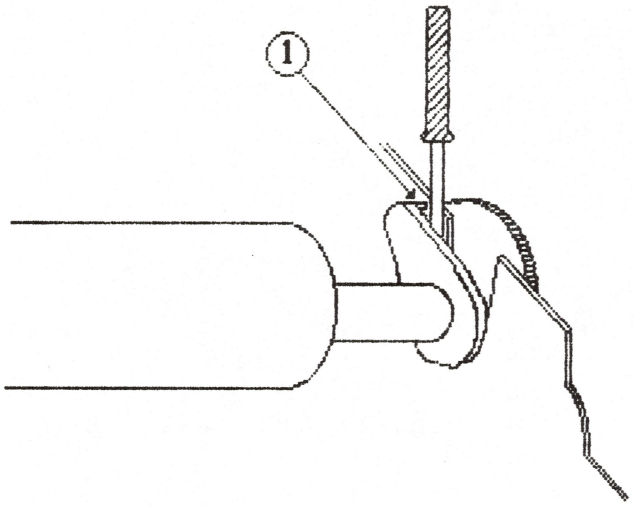

FIGURE 1

INTRODUCTION

The 15 inch ImageWriter is an extended carriage version of the standard ImageWriter printer. It differs only in the length of the following parts:

carriage,
platen,
carrier wire,
ribbon wire, and
dot head cable.

Replacement of the carrier wire and motor, platen removal, and removal of the mechanical assembly are slightly different from the standard ImageWriter procedures.

Some parts of this section will refer you to section 2 for procedures that are the same on both the ImageWriter and the 15 inch ImageWriter.

A. REMOVE AND REPLACE THE SWITCH PANEL - Refer to Section 2.

B. REMOVE AND REPLACE THE TOP COVER - Refer to Section 2.

C. REMOVE AND REPLACE PLATEN

Use these procedures instead of the procedures in Section 2.

For these procedures you will need:

1/8 inch flat-blade screwdriver

Remove:

1. Remove the power cord and the top cover (see Section 2B).

2. Pull the paper bail forward.

3. Pry the platen shaft holder (see Figure 1, #1) out from the carriage hole with a small screwdriver. Repeat for the holder at the other end.

4. The platen can now be removed by lifting it straight up.

NOTE: The platen can be cleaned by wiping with "Fedron" or "R41", available at printer supply houses.

CAUTION: Fedron and R41 emit harmful vapors and must be used only in a well ventilated space. Close containers when not in use. Do not use platen cleaner on plastic parts.

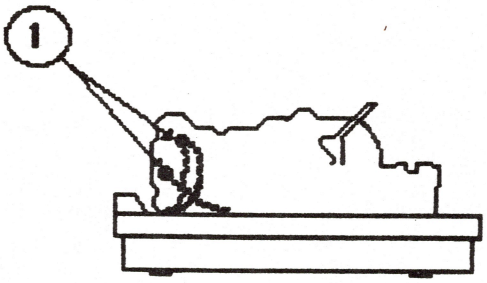

FIGURE 1

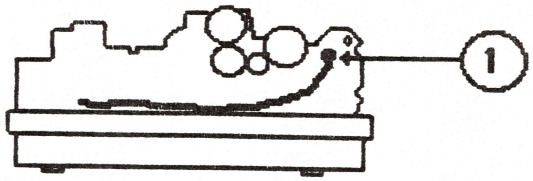

FIGURE 2

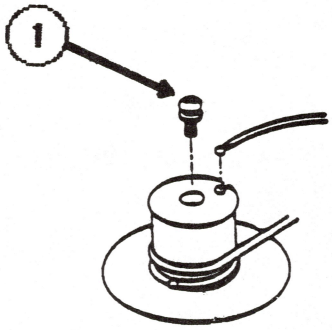

FIGURE 3

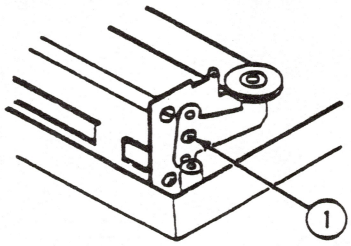

FIGURE 4

Replace:

1. Slide the platen down into the chassis.

2. Replace the right and left platen shaft holders.

D. REMOVE AND REPLACE THE RIBBON WIRE - Refer to Section 2.

E. REMOVE/REPLACE THE CPU BOARD - Refer to Section 2.

F. REMOVE/REPLACE AND ADJUST DOT HEAD - Refer to Section 2.

G. REMOVE/REPLACE THE CARRIER WIRE - Refer to Section 2.

H. REMOVE AND REPLACE THE MECHANICAL ASSEMBLY

Use these procedures instead of the procedures in Section 2

For these procedures you will need:

#2 Phillips screwdriver
7 mm Nutdriver
Pulley remover
1/4" flatblade screwdriver

Remove

1. Disconnect the power cord.

2. Remove the paper cover and carrier cover.

3. Remove the CPU board (Section 2E).

4. Remove the top cover (Section 2B).

5. Remove the two screws securing the ground wires to the left end of the chassis (see Figure 1, #1).

6. Remove the ground wire from the right end of the chassis (see Figure 2, #1).

7. Remove the two screws at the base of the power switch housing and set the housing aside.

8. Use a Phillips screwdriver to remove the screw from the top of the motor pulley (see Figure 3, #1).

   NOTE: The pulley can be stopped from turning by holding the carrier in place.

9. Loosen the screw on the tension arm at the right end of the mechanical assembly (see Figure 4, #1).

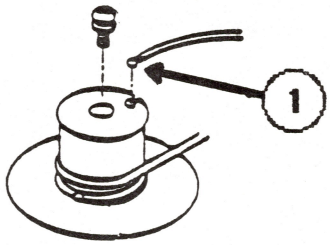

FIGURE 5

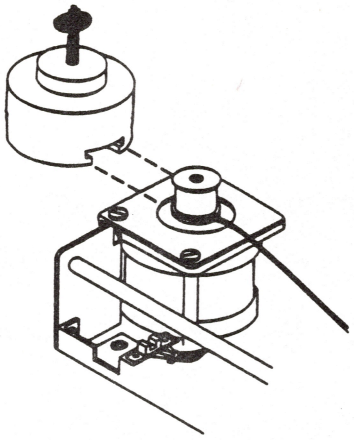

FIGURE 6

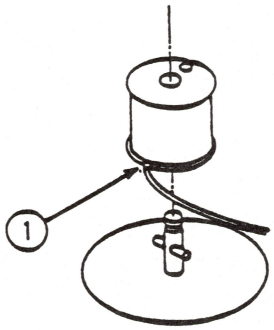

FIGURE 7

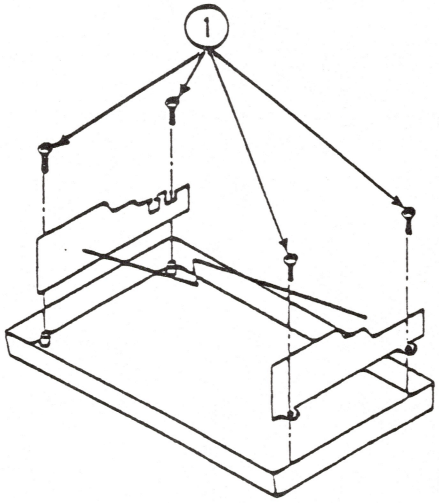

FIGURE 8

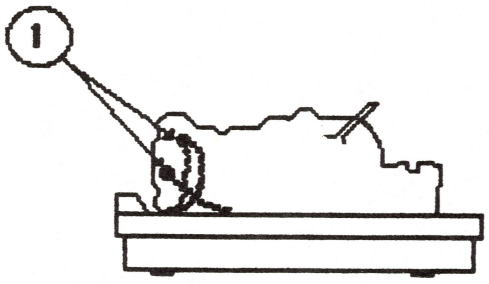

FIGURE 9

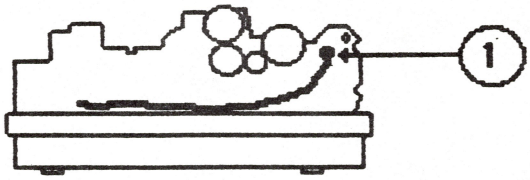

FIGURE 10

10. Slip the carrier wire off the pulleys at both ends of the carriage.

11. Remove the top end of the carrier wire (see Figure 5, #1).

12. Use the pulley remover to take off the motor pulley. Slide the pulley remover onto the top of the pulley and turn the screw clockwise until the pulley is free (see Figure 6).

13. Unwind the carrier wire.

14. Remove the bottom end of the carrier wire from the motor pulley (see Figure 7, #1).

15. To free the mechanical assembly, remove the four screws holding it to the bottom cover (see Figure 8, #1).

16. Lift the mechanical assembly out of the bottom cover.

Replace

1. Put the mechanical assembly back into the bottom cover. Make sure that the rubber washers and inserts are installed.

2. Replace the four screws that secure the mechanical assembly (see Figure 8, #1).

3. Replace the two screws and ground wires (see Figure 9, #1) at the left end of the chassis.

4. Replace the ground wire at the right end of the chassis (see Figure 10, #1).

5. Move the carrier to the center and wrap the carrier wire (the long end) around the right hand pulley.

6. Work this end of the wire under the carrier assembly until it reaches the left hand side of the printer.

7. Insert the end of the wire into the bottom slot on the motor pulley (see Figure 7, #1).

8. Seat the motor pulley on the shaft.

9. Hold the wire snug against the motor pulley with your thumb. Turn the pulley in a clockwise direction and wind up the carrier wire.

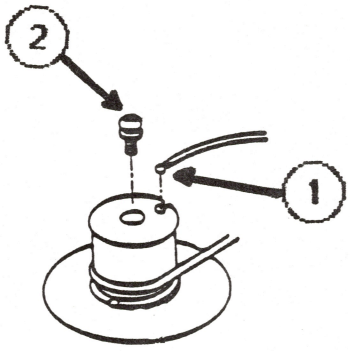

FIGURE 11

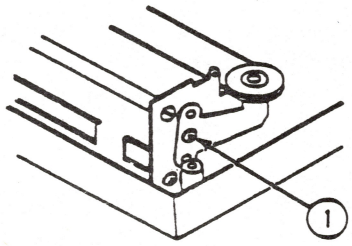

FIGURE 12

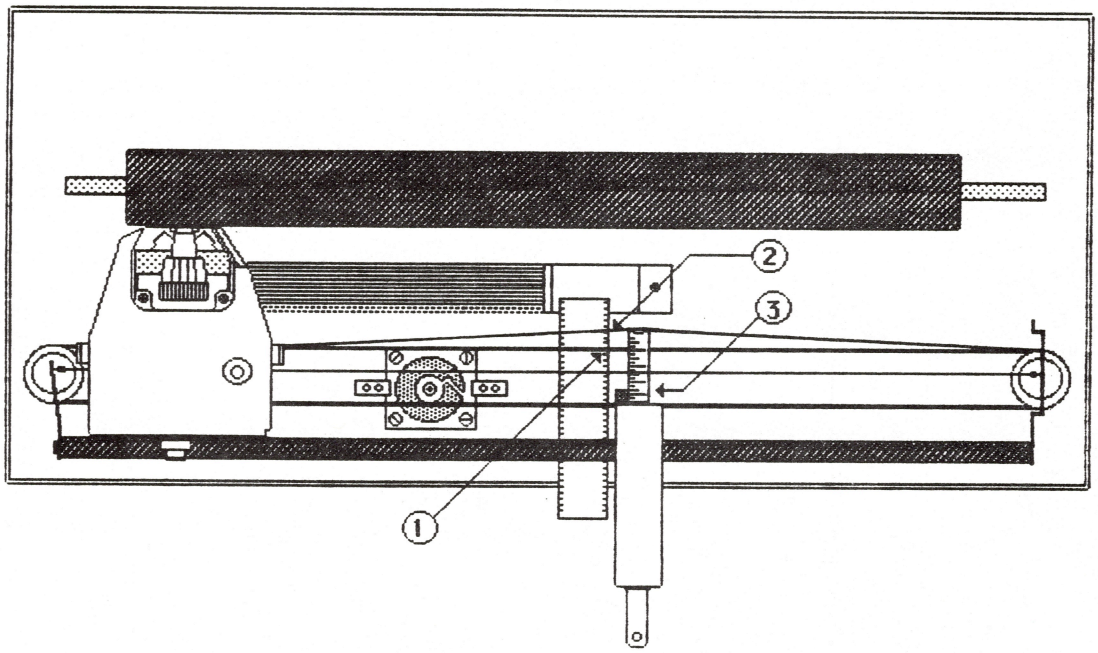

FIGURE 13

10. Wrap the other end of the carrier wire around the pulley on the left.

11. Insert this end of the wire into the top slot of the motor pulley (see Figure 11, #1).

12. Wrap the wire around the pulley in a clockwise direction.

13. Replace the motor pulley screw (see Figure 11, #2).

14. Tighten the tension screw until the wire is taut (see Figure 12, #1).

15. Lay a ruler under the carrier wire and visually mark the point where the rear carrier wire crosses the ruler (see Figure 13, #1). With the carriage assembly at the far left, push the carrier wire at its center with a tension gauge.

16. When the wire has been pushed 3/8 inch away from its original position (see Figure 13, #2), check the tension gauge (see Figure 13, #3). It should read 1 pound (lb.). If it doesn't, adjust the screw of the tension arm and recheck.

17. Replace the power switch housing.

18. Replace the top cover.

19. Replace the CPU board (see Section 2E). **NOTE:** Make sure to pull the slack out of the dot head cable before seating the CPU board.

20. Replace the carrier cover and paper cover.

21. Load paper and ribbon cartridge.

22. Power on and perform the self-test.

I. REMOVE AND REPLACE THE CARRIER MOTOR

Use these procedures instead of the procedures in Section 2.

For these procedures you will need:

1/4 inch flat blade screwdriver
#2 Phillips screwdriver
Pulley remover
7mm nutdriver
Tension gauge
Ruler

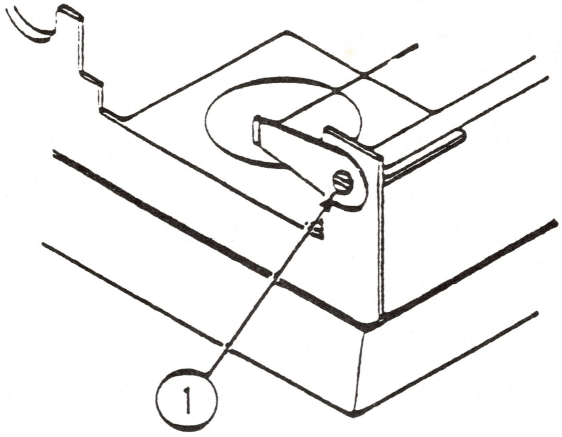

FIGURE 1

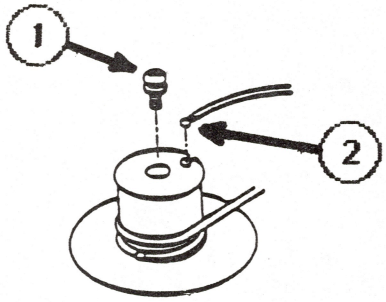

FIGURE 2

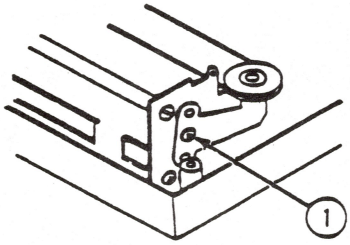

FIGURE 3

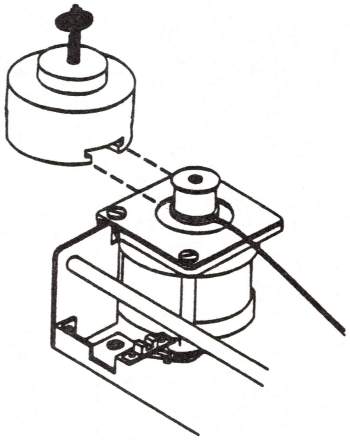

FIGURE 4

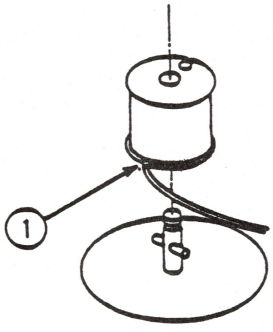

FIGURE 5

Remove:

1. Remove the power cord.

2. Remove the carrier cover and the paper cover.

3. Remove the motor cable from the CPU board (refer to Section 2E if necessary).

   NOTE: The CPU board does not need to be completely removed. The purpose of this step is to disconnect the motor cable from the CPU board. With the printer resting on its back edge and the solder side of the CPU board facing you, the motor cable is located at the upper left corner of the CPU board.

4. Remove the top cover (refer to Section 2B if necessary).

5. Loosen the ribbon wire tension arm (see Figure 1, #1) at the left end of the carriage.

6. Free the ribbon wire from the two ribbon wire posts.

7. Tie the wire in a loose knot over the carrier and move the carrier all the way to the left.

8. Use a Phillips screwdriver to remove the screw from the top of the motor pulley (see Figure 2, #1).

   NOTE: The pulley can be stopped from turning by holding the carrier in place.

9. Loosen the screw on the carrier wire tension arm (see Figure 3, #1) at the right end of the carriage.

10. Slip the carrier wire off the pulleys at both ends of the carriage.

11. Remove the top end of the carrier wire from the top slot of the pulley (see Figure 2, #2).

12. Unwind the carrier wire.

13. Slide the pulley remover onto the top of the pulley (see Figure 4) and turn the screw clockwise until the pulley is free.

14. Remove the bottom end of the carrier wire from the motor pulley (see Figure 5, #1).

15. Remove the two motor clamps located on either side of the motor.

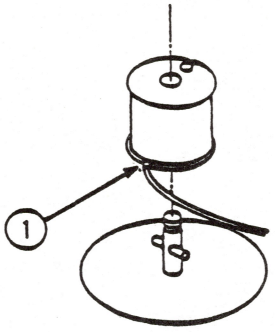

FIGURE 6

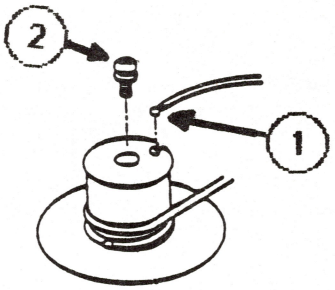

FIGURE 7

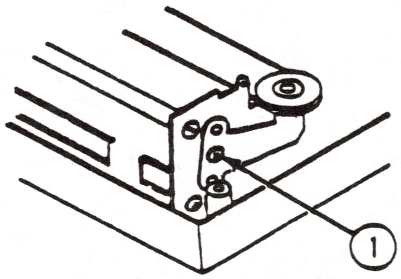

FIGURE 8

16. Use a flatblade screwdriver to remove the four motor mounting screws

17. Lift up the motor with one hand and work the motor cable free with the other hand.

Replace:

1. From the front side of the mechanical assembly, put the motor in its slot. Make sure that the rubber inserts are in the motor mounting holes and that the motor cable comes forward and then bends to the right toward the CPU board.

2. Replace the four motor mounting screws and the two motor clamps.

3. Wrap the carrier wire around the right hand pulley.

4. Work this end of the wire under the carrier assembly until it reaches the left hand side of the printer.

5. Insert the end of the wire into the bottom slot on the motor pulley (see Figure 6, #1).

6. Seat the motor pulley on the shaft.

7. Hold the wire snug against the motor pulley with your thumb. Turn the pulley in a clockwise direction and wind up the carrier wire.

8. Wrap the other end of the carrier wire around the pulley on the left.

9. Insert this end of the wire into the top slot of the motor pulley (see Figure 7, #1).

10. Wrap the wire around the pulley in a clockwise direction.

11. Replace the motor pulley screw (see Figure 7, #2).

12. Tighten the tension screw until the wire is taut (see Figure 8, #1).

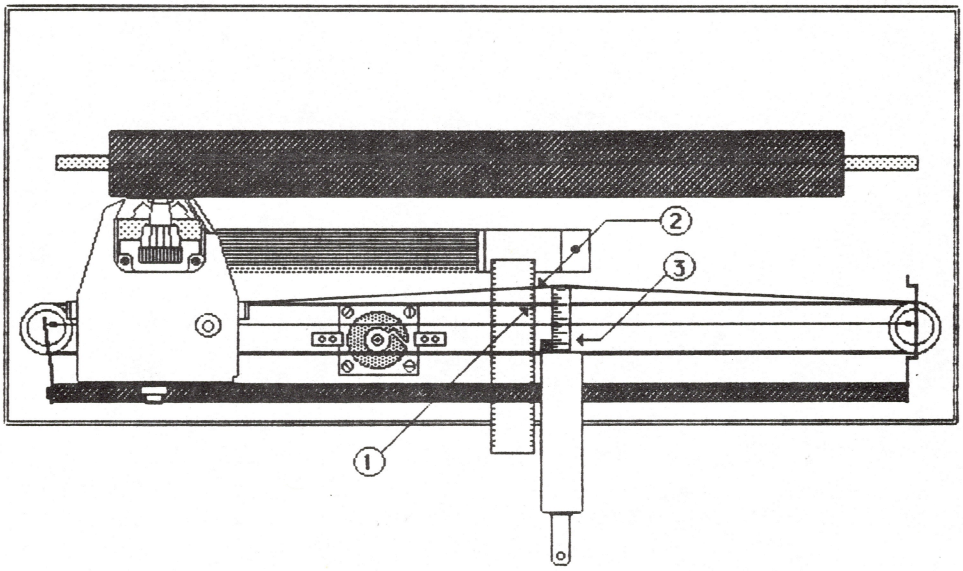

FIGURE 9

13. With the carrier pushed all the way to the left, lay a ruler under the carrier wire (see Figure 9, #1) and visually mark the point where the rear carrier wire crosses the ruler.

14. Push the rear carrier wire at its center until it has been pushed 3/8 inch away from its original position (see Figure 9, #2), check the tension gauge (see Figure 9, #3). It should read 1 pound (lb.). If it doesn't, adjust the screw of the tension arm and recheck.

15. Attach the ribbon wire to the ribbon wire posts. If the wire comes off the pulley, refer to Section 2D of the ImageWriter Technical Procedures.

16. Tighten the ribbon wire arm.

17. Connect the motor cable to the CPU board and replace the four CPU board screws.

18. Replace the bottom panel and its four screws.

19. Replace the top cover (make sure the interlock switch on the left is connected), carrier cover, and paper cover.

20. Power on and run the self test.

J. REMOVE AND REPLACE THE TRANSFORMER - Refer to **Section 2.**

ImageWriter Technical Procedures

Section 6

Appendix

Contents:

Imagewriter Configuration

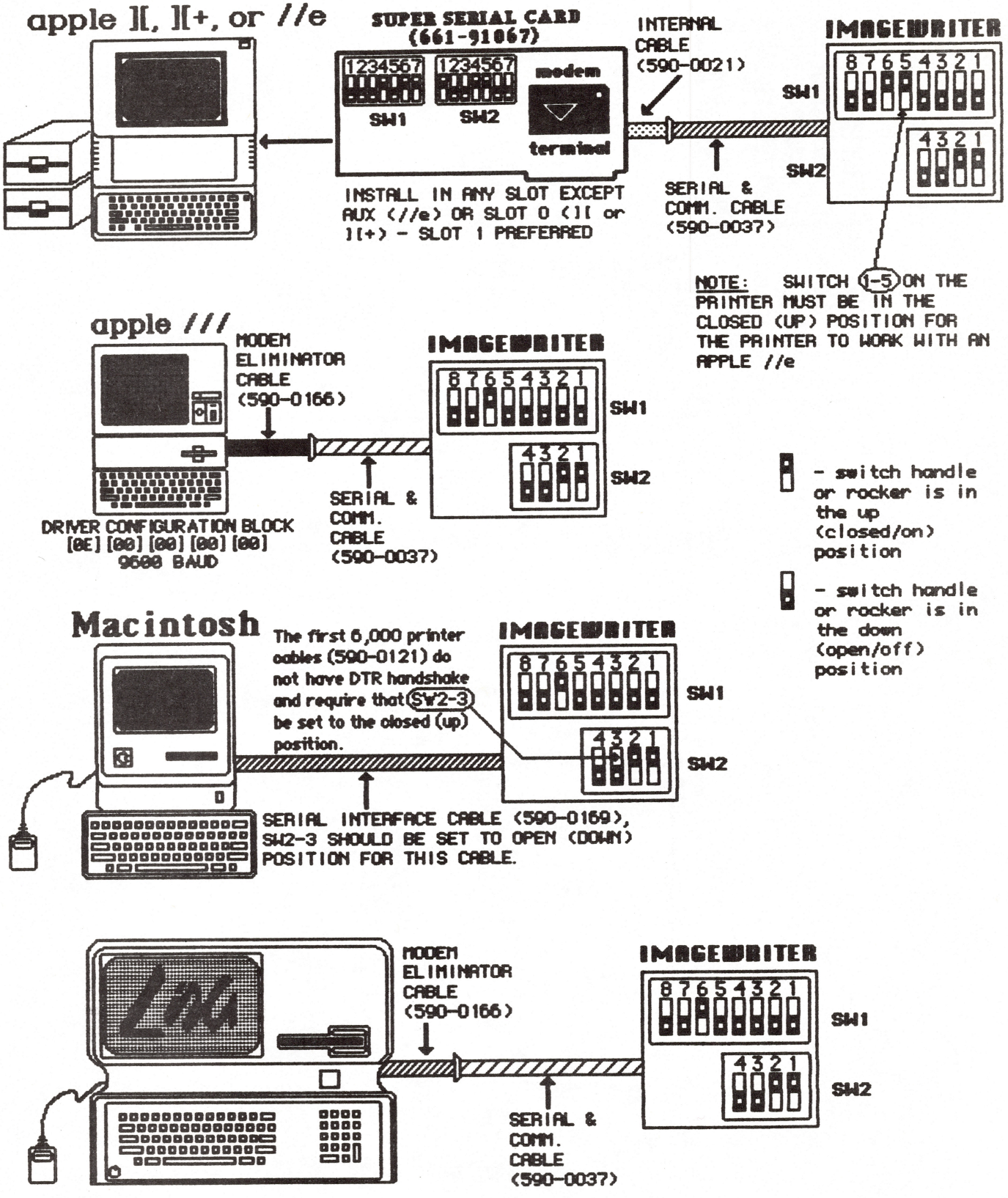

DIP SWITCH FUNCTIONS #1

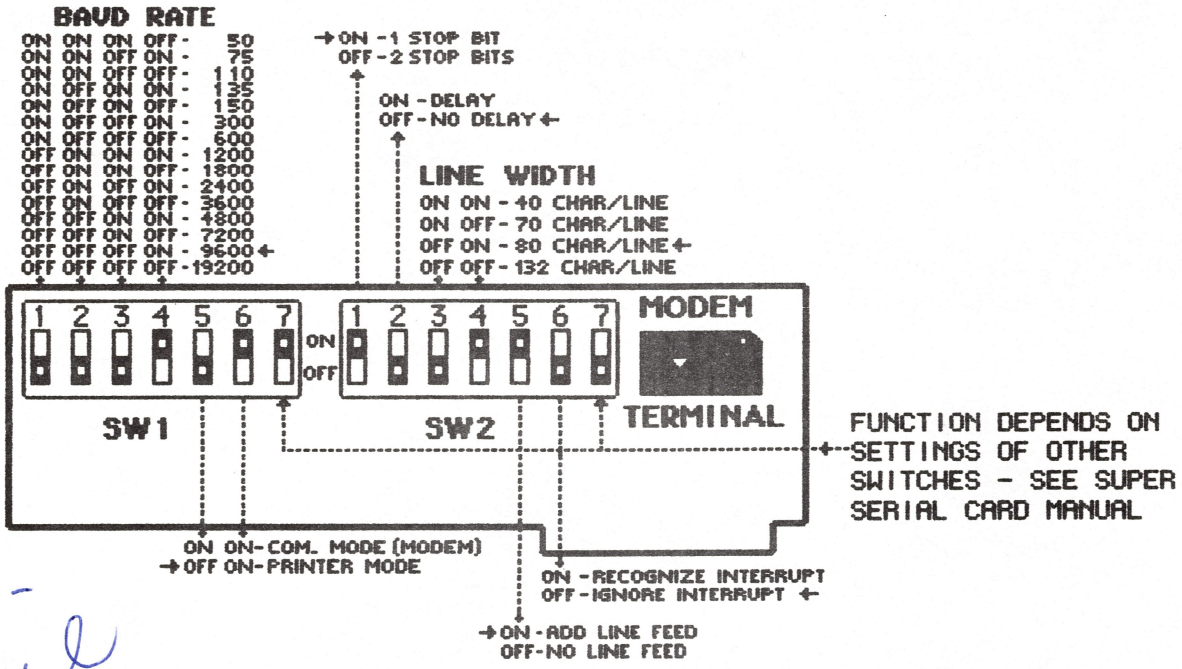

Super Serial Card

switches are shown in most commonly used positions (exception: For Apple //e, Imagewriter switch 1-5 should be set to closed position)

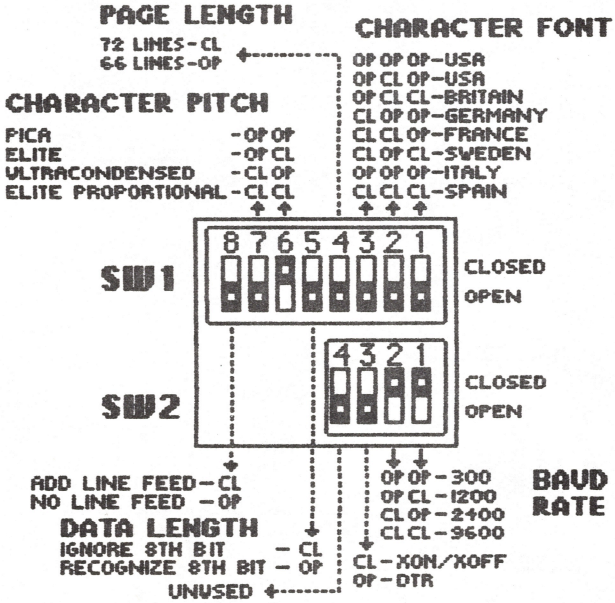

Imagewriter Printer

Note: This Section Is Not Original To This Binder,
It Was Sent Out By Apple With The Binder.

Apple ImageWriter II

Overview

The Apple® ImageWriter® II printer can enhance the quality of all your printed communications. It works with any Apple personal computer to create high-quality text and graphics in black or—with a color ribbon and appropriate software—in color. You can print up to 2 1/2 pages per minute (250 characters per second), or choose the "near-letter-quality" mode for documents with a professional look.
This is a printer that will grow with your needs. Add the ImageWriter II SheetFeeder for effortless cut-sheet printing. An AppleTalk® card allows up to 31 users to share an ImageWriter II over the AppleTalk Personal Network. Or add a 32K Memory Option printing buffer (works with Apple II computers only) so you can continue working while your document is being printed.For any application—from word processing and business graphics to accounting and artwork—you'll find the Apple ImageWriter II the right printer for your current and future needs.

Features	Benefits
• Complete Apple compatibility	• Works with any Apple personal computer system.
• Three speeds and resolutions	• Lets you choose the speed and output quality you need at any moment—from fast drafts to near-letter-quality finals.
• Choice of paper	• Accepts continuous-form computer paper as well as single sheets such as letterhead and labels.
• Simple paper loading	• Loads single sheets and continuous-form paper at the push of a button—or add the optional SheetFeeder for automatic loading of up to 100 pages of cut-sheet paper.
• Quiet operation	• Prints quietly enough for use in any office or schoolroom.
• Variety of text enhancements	• Supports boldface, superscript, subscript, underlining, and proportional text.
• Optional AppleTalk interface	• Allows access by as many as 31 users for cost-effective printing.
• Color capability	• With the ImageWriter II color ribbon, prints text and graphics in vibrant colors.
• Buffer option	• With the 32K Memory Option, stores your document in memory so you can continue working without waiting for printing to finish.*

Features	Benefits
• Multiple carbon-copy capability	• Lets you print up to four sheets simultaneously.

* With Apple II computers only.

System Requirements

To use the Apple ImageWriter II, you'll need one of the following systems:

- An Apple IIGS™, Apple IIc, or Apple III personal computer with the appropriate connector cable
- A Macintosh™, Macintosh Plus, Macintosh SE, Macintosh II, Macintosh XL, or Lisa® personal computer with the appropriate connector cable
- An Apple IIe, Apple II Plus, or Apple II personal computer with an Apple Super Serial Card (or other compatible interface) and the appropriate connector cable

See the ordering information section of this data sheet for cable requirements.

Technical Specifications

Print method	Impact dot matrix
Print modes/speeds	Draft: 250 characters per second (cps) at 10 characters per inch (2 1/2 pages per minute) Standard: 180 cps (2 pages per minute) Near-letter-quality: 45 cps (1/2 page per minute) (Actual throughput will vary depending on computer and software.)
Character format	Fixed alphanumeric symbols —Draft mode: Up to 12 by 8 dot matrix —Standard mode: Up to7 by 8 dots —Near-letter-quality mode: Up to 16 by 16 dots Custom (down-loaded) characters —Variable width, up to 16 by 8 dots
Character pitches	Draft, standard, and near-letter-quality: 9 to 17 characters per inch (72 to 136 characters per line), through use of normal and double-width modes Proportional text: 144 or 160 dots per inch

Built-in character sets	American, Italian, Danish, British, German, Swedish, French, and Spanish. Selectable by using dip switches or appropriate software.
Graphic densities	72, 80, 96, 107, 120, 136, 144, and 160 dots per inch (maximum dots per line: 1,280)
Line spacing	6 or 8 lines per inch, or user programmable in increments of 1/144 inch (up to 99/144 inch)
Maximum line-feed rate	4 inches per second
Paper requirements	Format: Cut sheet or fanfold continuous Width: 3 to 10 inches (on pin-feed paper, hole centers must be spaced between 4.0 and 9.5 inches) Thickness: 0.05 to 0.28 mm Maximum number of copies: Original plus three
Ribbons	Type: Fabric; continuous loop Available colors: —Black (typical life: 2 million characters) —Four-color (magenta, cyan, yellow, black) (typical life: 1 million characters per color)
Interface	Type: RS-422/RS-232 (serial) Buffer: 2 kilobytes Baud rate: 300, 1200, 2400, or 9600 (user selectable) Connector: mini-circular 8-pin
Size and weight	Height: 5.0 in. (127.0 mm) Width: 17.0 in. (431.8 mm) Depth: 12.0 in. (304.8 mm) Weight: 25 lbs. (11.36 kg)
Power requirements	120 volts AC (± 10%); 60 hertz
Apple ImageWriter II	With your order, you'll receive: • Apple ImageWriter II printer • Power cord • Ribbon cassette (black) • User's guide • Limited warranty statement

You will also need one of the following connector cables:

- M0197 Macintosh Plus Peripheral-8 Cable (for a Macintosh Plus, Macintosh SE, Macintosh II, or Apple IIGS)
- M0196 Macintosh Peripheral-8 Cable (for a Macintosh 128K, 512K, or 512K Enhanced)
- A2C4313 Apple IIc Peripheral-8 Cable (for an Apple IIc)
- A2C0314 Apple IIe Printer-8 Cable (for an Apple IIe, Apple II Plus, or Apple II)
- A2C0312 Apple IIe Modem-8 Cable (for a Macintosh XL, Lisa, or Apple III*)
- M2052 AppleTalk System Connector Kit (for use over an AppleTalk network with the ImageWriter AppleTalk Option installed)

* If you wish to use an Apple Super Serial Card to interface alternately with both the ImageWriter II and a modem, you'll need to use the Apple IIe Modem-8 Cable. For standard Apple II configurations, use the Apple IIe Printer-8 Cable.

Optional Accessories
ImageWriter II SheetFeeder

32K Memory Option

ImageWriter II AppleTalk Option

ImageWriter II Black Ribbon

ImageWriter II Color Ribbon

ImageWriter II Reference Manual
(available from Addison-Wesley Publishing Company)

March 1987. Product specifications are subject to change without notice.

Apple ImageWriter II Section

IMAGEWRITER II TECHNICAL PROCEDURES

TABLE OF CONTENTS

Section 1 - Basics

Section 2 - Troubleshooting

Section 3 - Take-Apart

Section 4 - Adjustments

Section 5 - SheetFeeder

Section 6 - ImageWriter II Illustrated Parts List

Section 7 - SheetFeeder Illustrated Parts List

Appendix A

ImageWriter II Technical Procedures

Section 0

ImageWriter II Service Notes

PAPER SENSOR AND LOGIC BOARD COMPATIBILITY

In February 1987 a new logic board, paper sensor, and paper-empty guide were implemented in manufacturing. The following notes explain how to identify these new components and how to resolve the compatibility issues that they may raise.

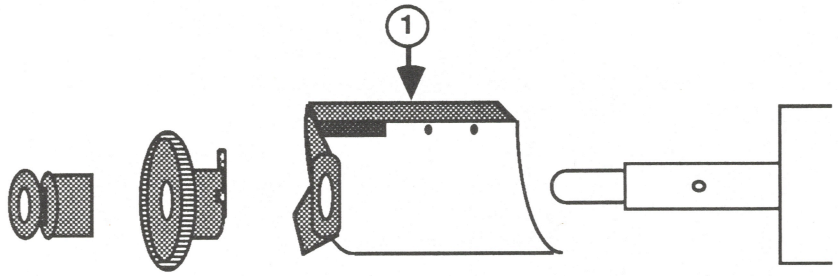

FIGURE 1

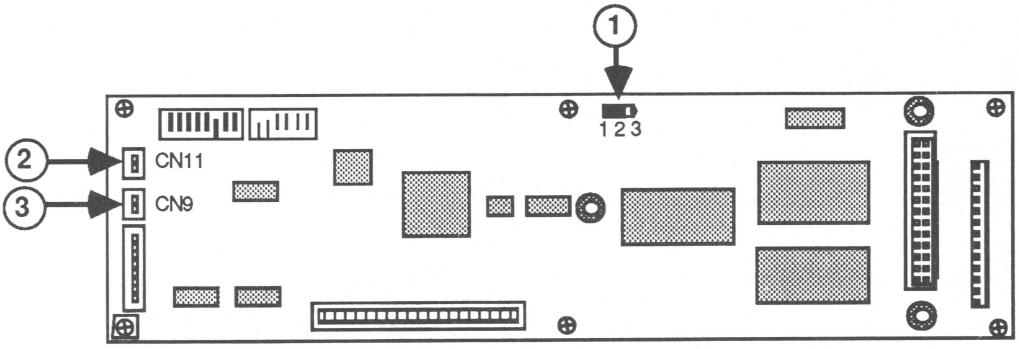

FIGURE 2

Identification

There are two ways to identify the type of paper sensor that is installed:

1. Look at the left side of the platen assembly. If there **IS** a paper-empty plate (Figure 1), the mechanical paper sensor is installed. If there is **NO** paper-empty plate, the optical paper sensor is installed.

2. Examine the logic board. If it is an old version, it is a mechanical paper sensor. If it is a new logic board, check the selector switch setting and the connector (CN9 or CN11) as explained below.

Logic Boards

There are two versions of the main CPU PCB available. The type of main CPU PCB installed in the machine is directly related to the type of paper sensor that is installed.

The new logic board supports both paper sensors and has

- A selector switch that allows this board to be used with both the mechanical and the optical paper sensor (Figure 2, #1). If a mechanical paper sensor is installed, the jumper should be on pins 1 and 2. If an optical paper sensor is installed, the jumper should be on pins 2 and 3.

- An extra connector, CN11, that is used for the optical paper sensor (Figure 2, #2). Connector CN9 is used for the mechanical paper sensor (Figure 2, #3).

- A new ROM version that supports both paper sensors.

The old logic board only supports the mechanical paper sensor.

Summary

There are two paper sensors. The mechanical paper sensor can be used with either logic board. The optical paper sensor can only be used on the new logic board.

For instructions on replacements, refer to Section 3, Take-Apart.

ImageWriter II Technical Procedures

Section 1

Basics

Contents

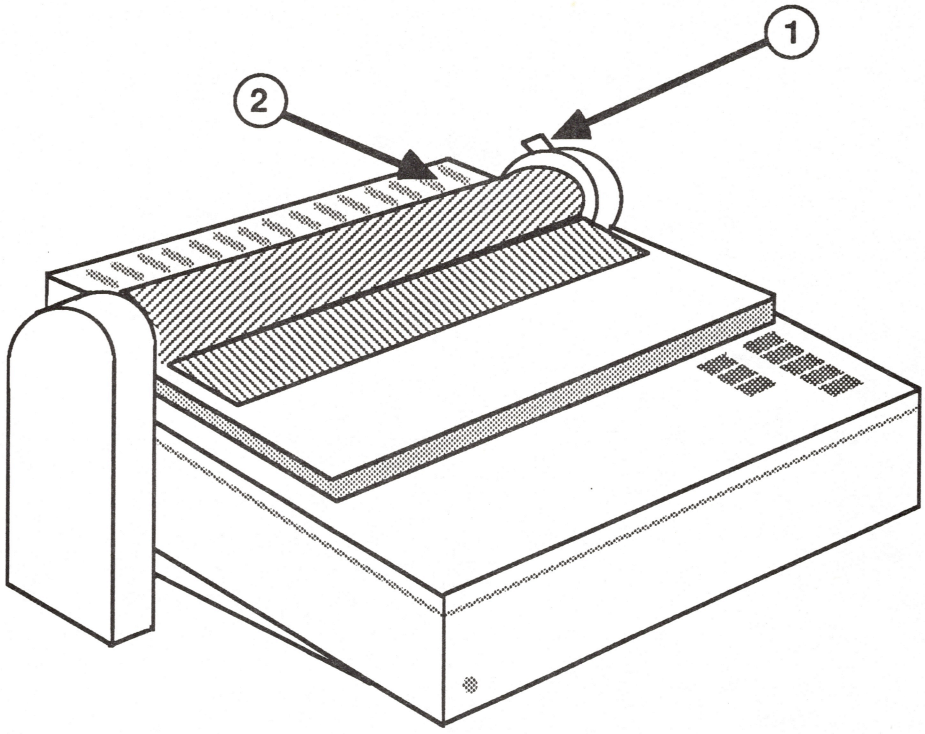

FIGURE 1

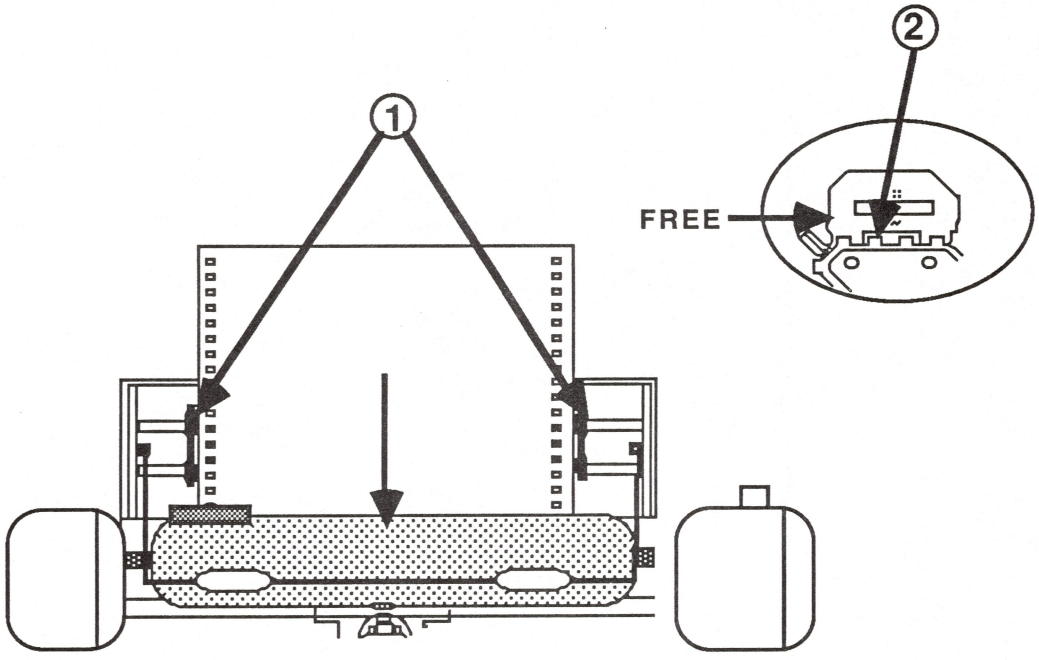

FIGURE 2

INTRODUCTION

The ImageWriter™ II printer is an improved version of the ImageWriter offering the following enhancements:

-- faster printing speed
-- color capabilities
-- AppleTalk Option Card or 32K Memory Option Card

For a complete listing of the differences, turn to **Section 7, Appendix.**

POWER ON AND OFF

1. Connect the power cord to the printer.
2. Plug the power cord into an electrical outlet.
3. Press the power switch ON.
4. Check the switch panel. Make sure the POWER light comes on.
5. Press the power switch OFF.

LOAD PAPER

1. Make sure the power is off.
2. Pull the paper release lever forward (see Figure 1, #1).
3. Lift up and remove the back cover (see Figure 1, #2).
4. Lift up the clamps on both forms tractors (see Figure 2, #1).
5. Make sure that the left forms tractor is positioned all the way to the left. To move the forms tractor, pull forward the tractor release lever (see Figure 2, #2). Move the forms tractor all the way to the left. Lock the forms tractor in place by pushing the tractor release lever back.
6. Place the paper over the forms tractor pins. If the paper doesn't line up with the pins, move the right forms tractor until it does. Lock the right forms tractor in place.

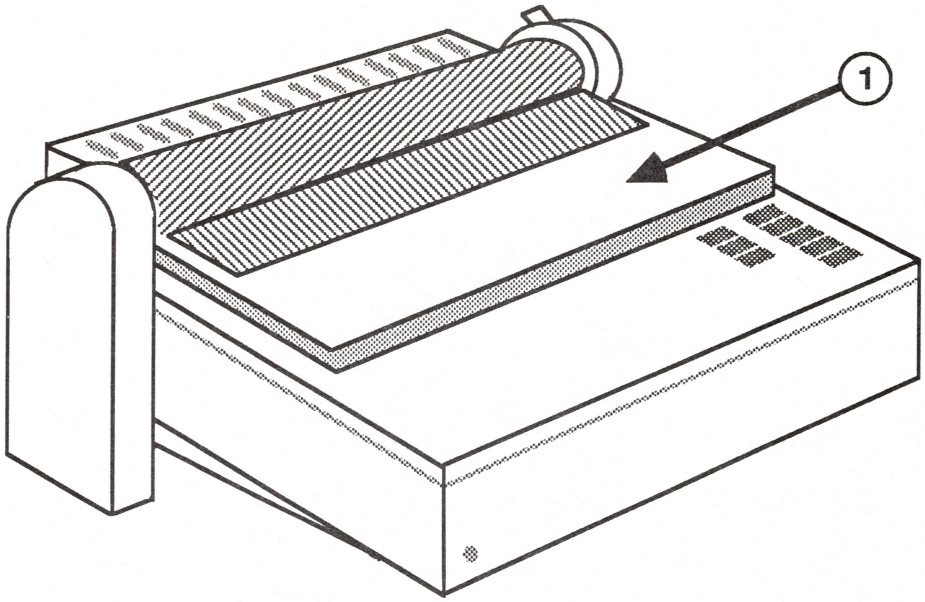

FIGURE 3

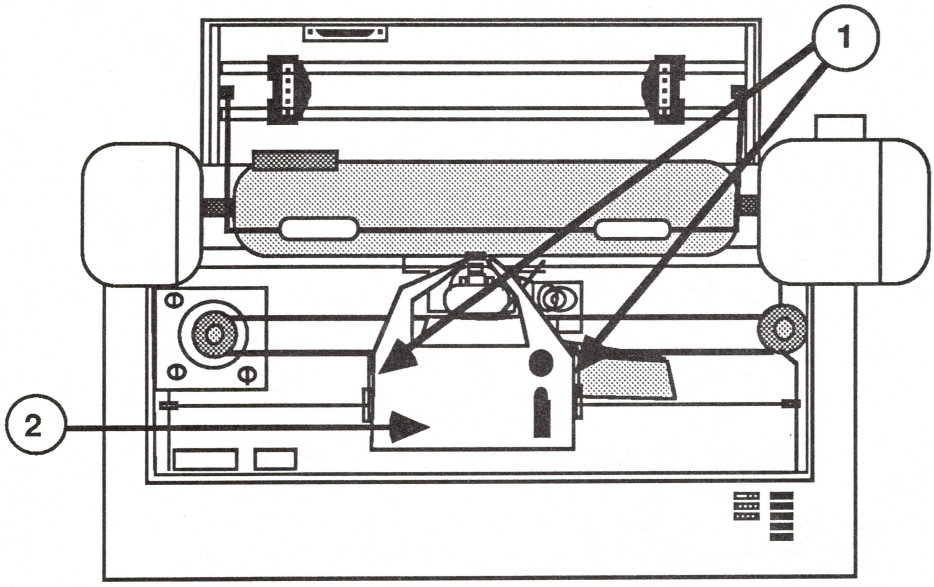

FIGURE 4

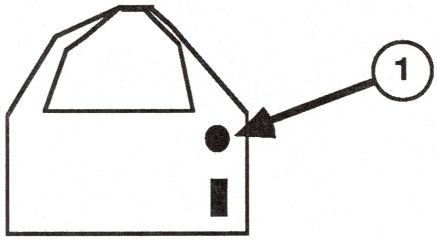

FIGURE 5

7. Push down the clamps on both of the forms tractors.

8. Turn the platen knob until the paper comes through.

9. Put the back cover on.

REMOVE PAPER

1. Make sure the power is off.

2. Check to be sure the release lever is set to tractor feed.

3. Turn the platen knob and back the paper out.

REMOVE RIBBON CARTRIDGE

1. Make sure the power is off.

2. Lift up and remove the paper cover (see Figure 3, #1).

3. While pushing down on the cartridge latch arms (see Figure 4, #1), lift up the cartridge (see Figure 4, #2).

LOAD RIBBON CARTRIDGE

1. Make sure the power is off.

2. Get a ribbon cartridge.

3. Place the cartridge on the ribbon cartridge deck.

4. Push down on the cartridge until it snaps into place (see Figure 4, #2).

5. On the cartridge, turn the knob (see Figure 5, #1) clockwise until you hear it "click" and the ribbon is taut.

6. Replace the paper cover.

   NOTE: Be sure to replace the paper cover before attempting to operate the printer. The printer will not print without the paper cover in place.

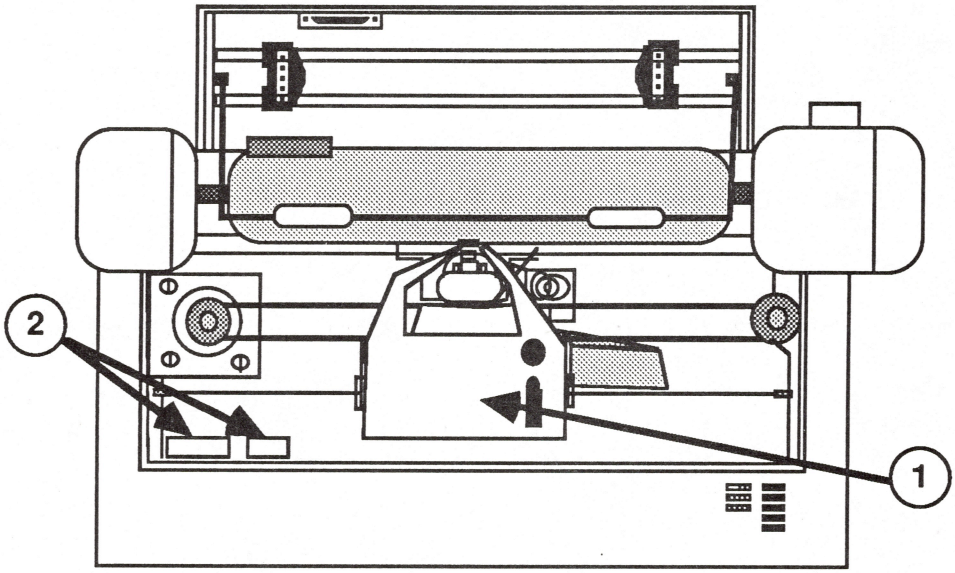

FIGURE 6

RUN SELF-TEST

NOTE: If the select button is accidently depressed during power-up, the next data that is sent to the ImageWriter will be a hexadecimal dump. If this problem occurs, power the ImageWriter off and then back on. The printer will power up in the proper mode.

1. Make sure the power is off.

2. Load the paper.

3. To run the self-test, press and hold down the form feed switch on the switch panel while you turn the power on. Then release both switches.

   The first part of the printout will show the ROM revision number and the DIP switch settings and will indicate whether either option card is installed. After that, the printer will generate lines of characters. Each line contains the letters of the alphabet, the numbers 0 through 9, and a series of special characters.

   NOTE: If you are using a colored ribbon, the test printout will alternate the colors available for each line printed.

4. To end the test, turn the power off.

SET CONFIGURATION DIP SWITCHES

Configuration DIP switches are used to provide variations in the ways in which the printer may be operated. For additional information on switch settings refer to the ImageWriter II User's Manual.

For this procedure you will need:

A tiny flatblade screwdriver

1. Make sure power is off.

2. Remove the paper cover.

3. Slide the carrier all the way to the right (see Figure 6, #1).

4. Locate the switches SW 1 and SW 2 (see Figure 6, #2).

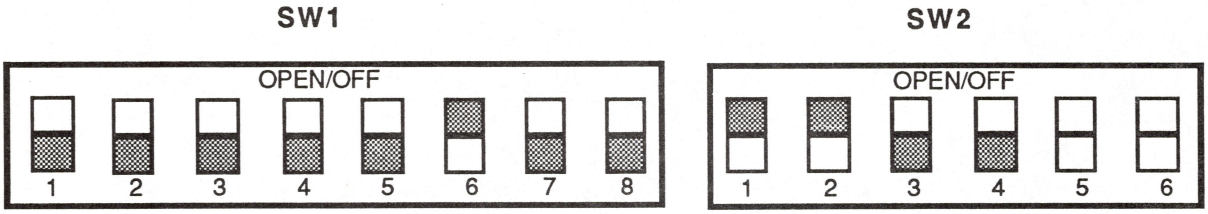

SWITCH 1	SETTING	FUNCTION
1,2,3	OPEN	CHARACTER SET (AMERICAN)
4	OPEN	PAGE LENGTH (66 LINES)
5	OPEN	PERFORATION SKIP (NO)
6	CLOSED	CHARACTERS PER INCH (12 CPI)
7	OPEN	CHARACTERS PER INCH (12 CPI)
8	OPEN	LINE FEED AFTER CARRIAGE RETURN (NONE)

SWITCH 2	SETTING	FUNCTION
1,2	CLOSED	BAUD RATE (9600)
3	OPEN	COMMUNICATION PROTOCOL (DTR)
4	OPEN	OPTION CARD NOT INSTALLED
4	CLOSED	OPTION CARD INSTALLED

FIGURE 7

NOTE: SW2-5 and SW2-6 are used only when performing the firing hammer adjustment (refer to **Section 4, Adjustments**).

5. Use a small screwdriver to move the switch handles as desired. Figure 7 shows the switches as they were set at the factory: the white half of a box indicates the position of the switch handle. A switch is said to be open when its handle is toward the rear of the printer. It is closed when the handle is toward the front of the printer. The chart below the switches explains the function of each switch and indicates the factory setting (in parentheses).

6. Replace the paper cover.

7. Run the self test.

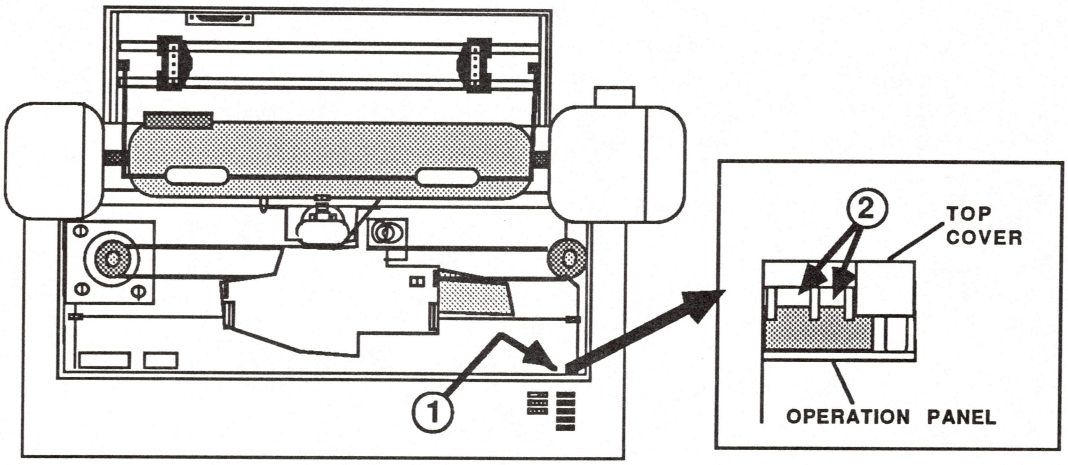

FIGURE 8

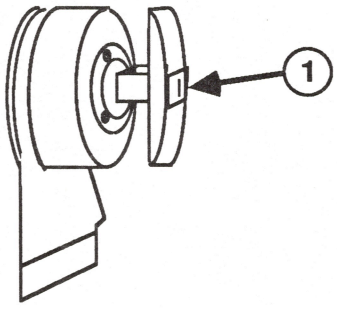

FIGURE 9

PERIODIC MAINTENANCE

You should clean the printer as required. You should lubricate the printer once a year, or more often when in heavy use.

1. Make sure the power is off.

2. Remove the tractor cover and the paper cover.

3. Remove the paper and ribbon cartridge.

NOTE: For steps four and five refer to **Section 3, Take-Apart,** for complete instructions on removing the carrier assembly and carrier shaft.

4. On the carrier shaft, wipe off any dirt with dry gauze or absorbent cotton.

5. Apply four drops of tellus lubrication oil to each of the felt wipers located under the carrier assembly.

6. Find the detector plate. It is on the right hand side of the printer, hidden just below the on/off switch (see Figure 8, #1).

7. Using a brush remove any paper dust (see Figure 8, #2).

8. Clean the dot head (see Figure 9, #1) with a low residue cleaner, such as isopropyl alcohol or freon, and a lint-free cloth.

9. Replace the ribbon cartridge.

10. Perform the self test to verify optimum printing performance.

MAINTENANCE SCHEDULE

The following table summarizes the manufacturer's recommended maintenance intervals:

OPERATOR -- As required	DEALER SERVICE -- As required during preventive or corrective maintenance	DEALER SERVICE -- Once every year or about 500,000 lines of print	DEALER SERVICE -- Once every 2 years or about 1,000,000 lines of print	
	x	x		Clean and lubricate carrier shaft
		x		Lubricate platen sleeve bearings
		x		Lubricate tractor sleeve bearings
	x	x		Clean dot head
	x	x		Clean detector plate
			x	Check motor mounting screws for looseness
x	x	x		Clean platen, feed rollers, and paper bail rollers
x	x	x		Check print quality

TOOLS AND MATERIALS NEEDED

The following is a complete list of tools and materials needed for performing these procedures.

Screwdrivers:	#2 Phillips, magnetized small Phillips, magnetized medium flathead small flathead 1/8 inch blade flathead set of jeweler's flathead screwdrivers
Miscellaneous:	curved point needlenose pliers (small) fuse puller digital multimeter (optional)

ImageWriter II Technical Procedures

Section 2

Troubleshooting

Contents:

INITIAL CHECK

NOTE: Remove the Option Card if one is installed. Check the DIP switches after removal. SW2-4 should be open/off with the card out.

This initial check deals with minor problems such as a loose cable, bad ribbon cartridge (color or black), incorrectly set DIP switches, etc. The items on this list should always be checked before you begin actual troubleshooting.

Look at the following chart and examine the items listed under the check column if you have any of the symptoms listed:

Symptom	Check
Error lamp blinks	-Is carrier cover securely in place? -If left margin error occurs while printing, it may be a software problem: try other software. -Option card dip switch open/off with no card installed?
Select off, Error on	-No paper or paper improperly inserted?
No printing or garbled printing	-Is the interface cable between the printer and computer loose or disconnected? -Are DIP switches (Switch 2-1 through 2-4) improperly set?
Software-specific problem	-Try a known good piece of software.
Prints okay for a while, then garbage	-Set DIP switch 2-3 to the correct serial protocol.
Overprinting	-Check that the program being used is set for the correct line spacing and line length.
Light printing	-Change ribbon cartridge. -Try different settings of the impression control lever (four positions).
Erratic carrier motion; loud hum	-Remove black tube-shaped shipping protection from the carrier shaft.

HOW TO USE THE TABLES

The troubleshooting tables deal with mechanical or electrical problems within the ImageWriter II.

If the "Initial Check" does not correct the problem, run the self test (see **Section 1, Basics**). Examine the printer for the symptoms listed below, and turn to the appropriate table for instructions. Step-by-step instructions for recommended replacements and adjustments can be found by consulting the tables of contents of the appropriate sections.

NOTE: Some of the tables have you use a multimeter to check resistance and continuity on some replaceable parts and modules. If you do not know how to use the multimeter, you will have to exchange the part in question to verify that the customer's part is bad.

TABLE 1

CARRIER MOVEMENT PRESENT **NO CARRIER MOVEMENT**

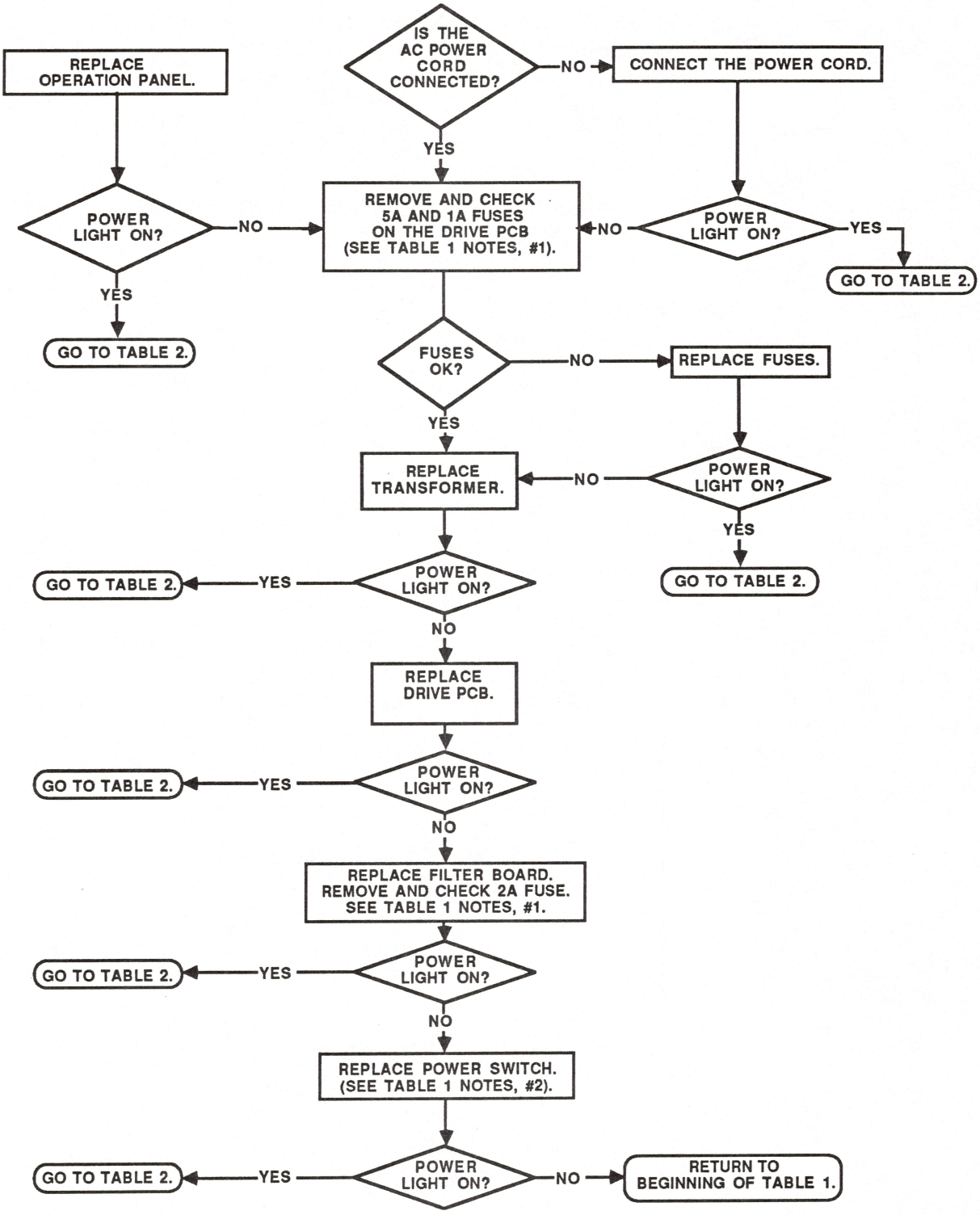

TABLE 1 NOTES - POWER LIGHT NOT LIT

1. To check the fuses (printer should be off):

   NOTE: To check the fuse on the noise filter PCB assembly, the mechanical assembly must be removed from the printer.

   a. Set the digital multimeter to measure 200 ohms resistance.

   b. Remove and check the fuses on the drive PCB one at a time.

   c. All fuses should measure 0.00 (indicating continuity).

2. To check the power switch <u>before removal</u> (printer should be off):

   a. Disconnect the plug-in connectors running from the power switch to the right support leg.

   b. Set the digital multimeter to measure 200 ohms resistance.

   c. Insert the probes into the connectors, making sure you test white wire with white wire, and black wire with black wire.

      When the switch is up or in the off position, you should get a reading of 1, indicating there is no connection. When the switch is down or in the on position you should get a reading of 0 for continuity.

   d. Insert the probes into the connectors, checking black wire with white wire. A reading of 1, regardless of the position of the switch, should be displayed.

TABLE 2

POWER LIGHT ON, NO PRINTING

NOTE

IF SELF TEST SHOWS POOR QUALITY PRINT, GO TO TABLE 5 AS INSTRUCTED.

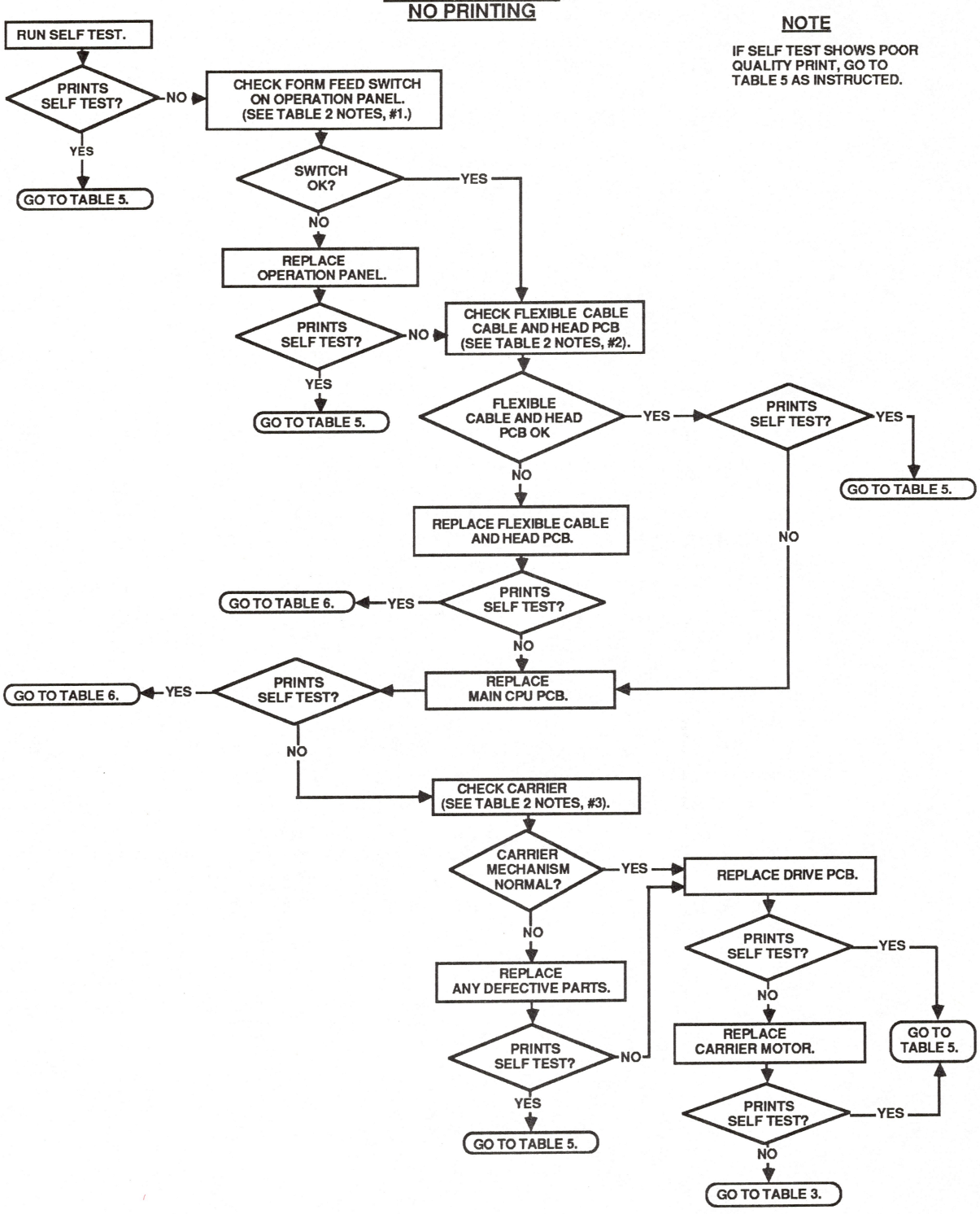

TABLE 2 NOTES - POWER LIGHT ON, NO PRINTING

1. To check the Form Feed switch on the operation panel (printer should be off):

   a. Set the digital multimeter to measure 200 ohms resistance.

   b. Place the probes on pin 12 and pin 13 of the operation panel connector. The reading should show no connection (1).

   c. Depress the Form Feed switch. The reading should show continuity (0.00).

2. To check the flexible cable and the Head PCB:

   a. Detach the flexible cable from the drive board.

   b. Locate the home position switch (under the left hand side of the ribbon carrier on the Head PCB).

   c. Set the digital multimeter to measure 200 ohms resistance.

   d. Place the probes on pin 10 and pin 12 on the flexible cable.

   e. Push the home position switch on the Head PCB. The reading should be 0.00 when the switch is depressed. When the switch is released, the reading should be 1.

3. Manually move the carrier back and forth. If it will not move, visually inspect the following:

   a. Check the ribbon cartridge to be sure the ribbon is wound when the knob is turned in the direction of the arrow.

   b. Check the carrier shaft and carrier belt for damage and foreign materials.

   c. Check the ribbon wire for dislocation and damage.

   d. Perform carrier shaft maintenance (see **Section 1, Basics**).

TABLE 3

NO PAPER FEED (POWER LIGHT LIT)

NOTE

IF SELF TEST SHOWS POOR QUALITY PRINT GO TO TABLE 5 AS INSTRUCTED.

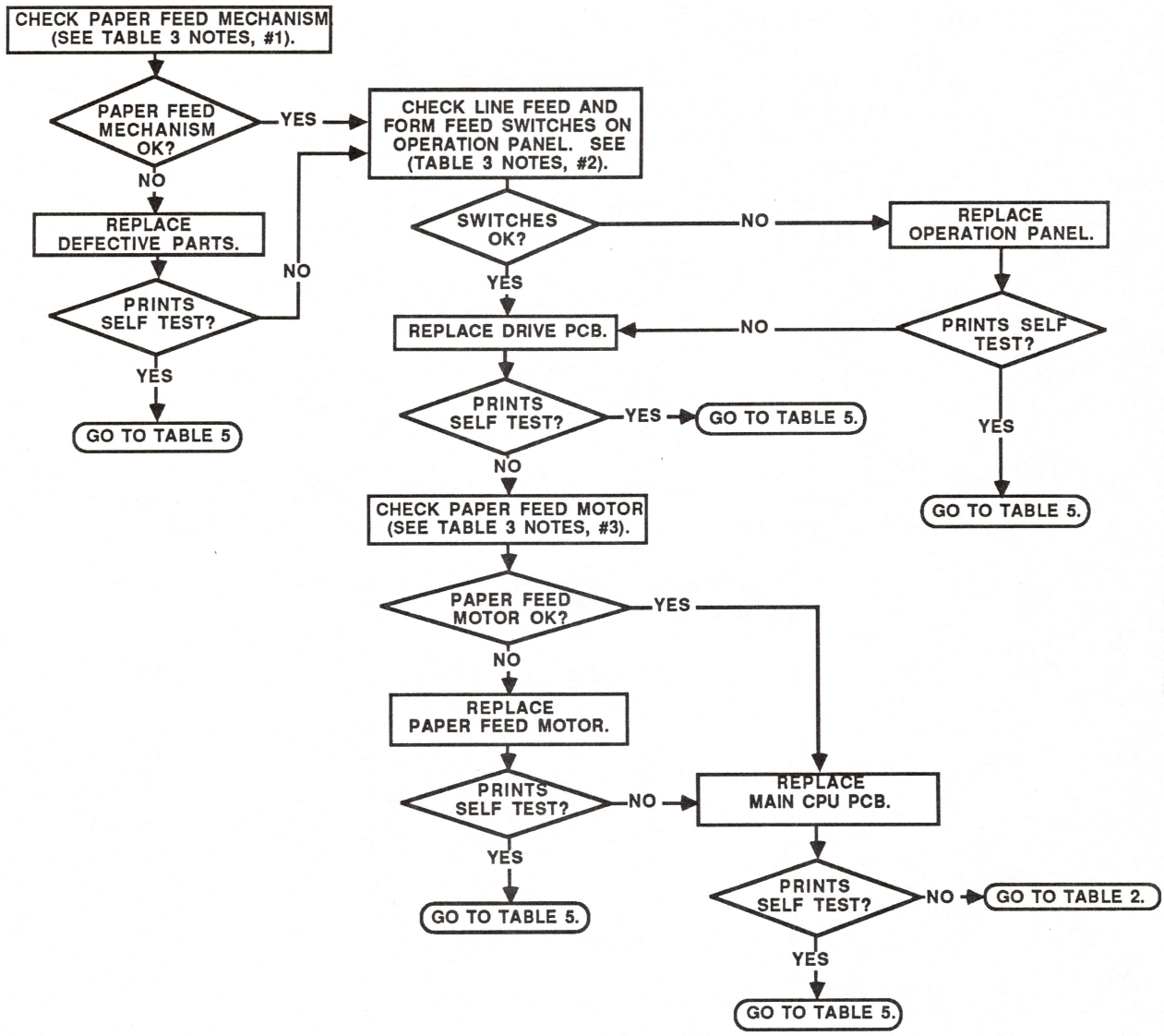

TABLE 3 NOTES - NO PAPER FEED

1. To check the paper feed mechanism, insert paper and turn the platen knob. Look to make sure the gears to the left of the platen mesh properly.

2. To check the Form Feed and Line Feed switches on the operation panel (printer should be off):

   a. Set the digital multimeter to measure 200 ohms resistance.

   b. Place the probes on pin 12 and pin 13 of the operation panel connector. The reading should show no connection (1).

   c. Depress the Form Feed switch. The reading should show continuity (0.00).

   d. Place the probes on pin 11 and pin 13 of the operation panel connector. The reading should show no connection (1).

   e. Depress the Line Feed switch. The reading should show continuity (0.00).

3. To check the paper feed motor (printer should be off):

   a. Set the digital multimeter to measure 200 ohms resistance.

   b. At the cable connector end (disconnected from the drive PCB), check the resistance values between pins 6 and 4, 6 and 2, 5 and 1, and 5 and 3 (pin 1 is the black wire). The value for each reading should be approximately 22 ohms.

   c. Check the resistance values between pins 3 and 1, and 2 and 4. The value for each reading should be approximately 44 ohms.

TABLE 4

RIBBON COLOR SELECTION FAILS

NOTE

IF SELF TEST HAS POOR QUALITY PRINT GO TO TABLE 5 AS INSTRUCTED

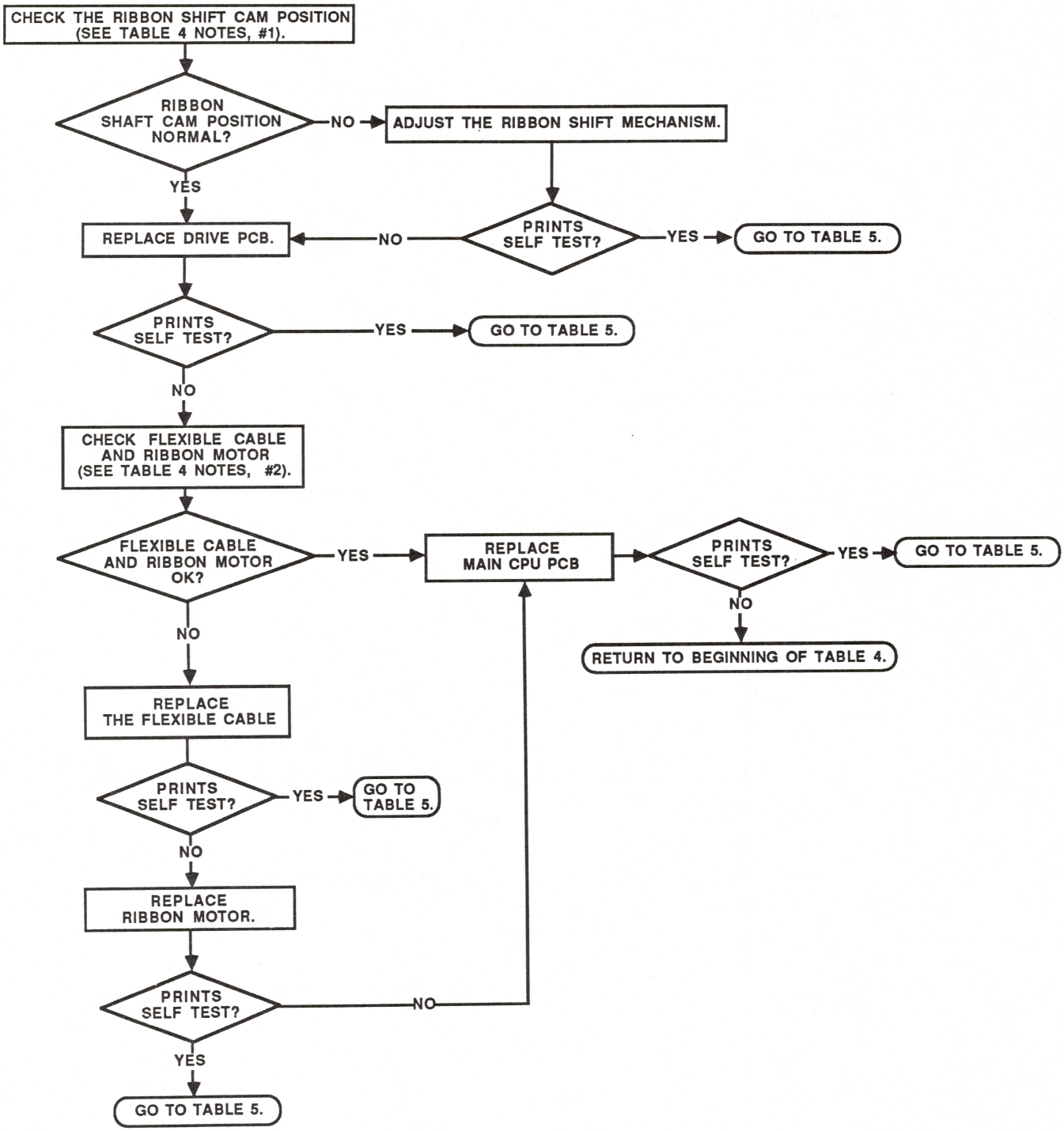

TABLE 4 NOTES - RIBBON COLOR SELECTION FAILS

1. Examine the color ribbon assembly (printer should be off). Verify that the black tabs on the ribbon plate are riding on the spiral ridge of the ribbon cam. Check the ribbon cam for looseness. Also check the copper tab mounted behind and below the ribbon cam. When the cam is all the way up, the vertical ridge on the cam should hit the tab. If the color ribbon assembly is loose, the ribbon cam position is misaligned. For color printing adjustment procedures turn to **Section 4, Adjustments.**

2. Check the flexible cable and the ribbon motor (printer should be off):

   a. Detach the flexible cable from the drive PCB.

   b. Set the digital multimeter to measure 200 ohms resistance.

   c. On the flexible cable, check the resistance values between pins 3 and 7, 5 and 7, 4 and 8, and 6 and 8. The value for each reading should be approximately 120 ohms.

   d. Check the resistance values between pins 3 and 5, and 4 and 6. The value for each reading should be approximately 240 ohms.

TABLE 5

PRINT QUALITY PROBLEMS
(POOR QUALITY, NO PRINT, OR DOTS MISSING)

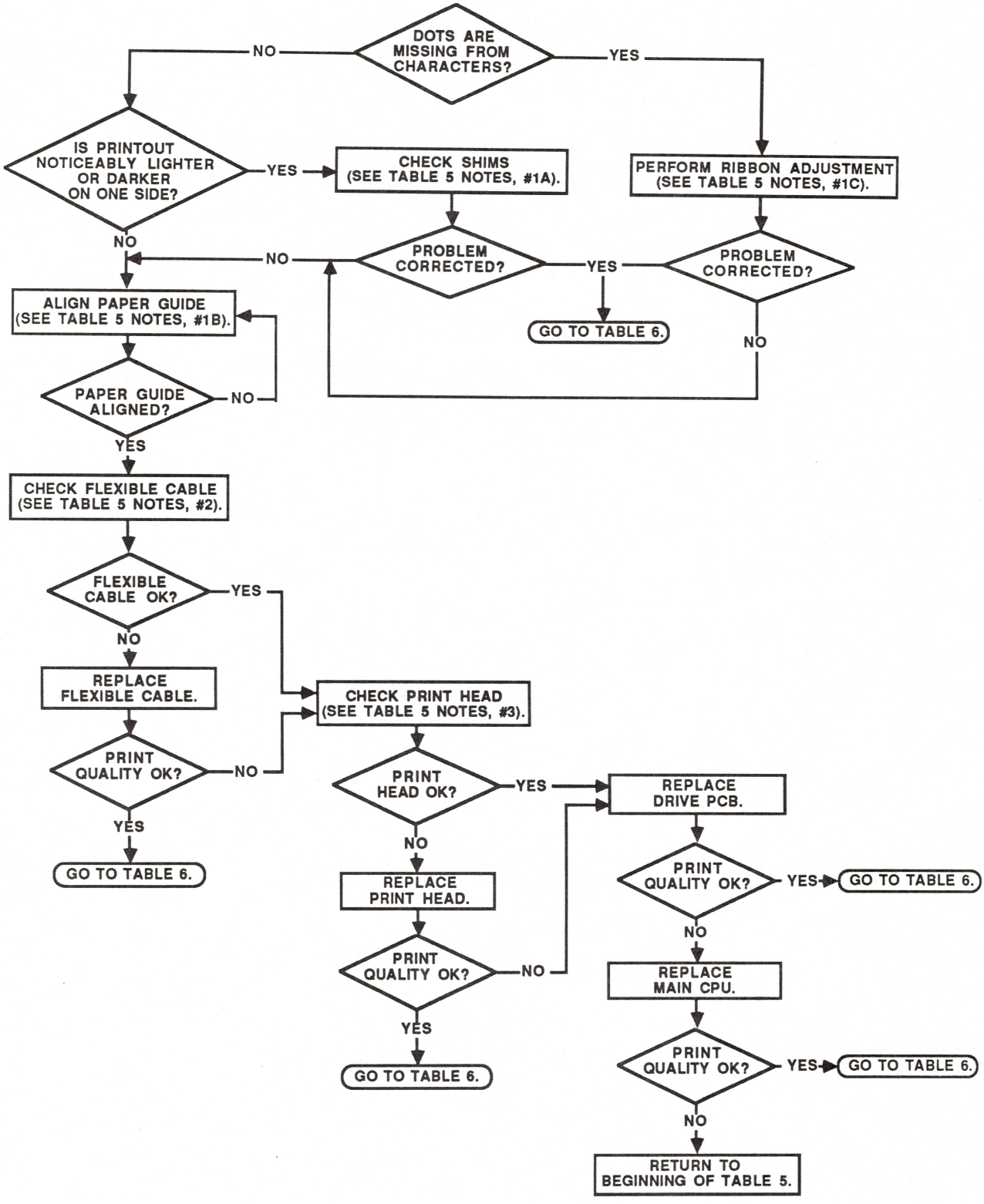

TABLE 5 NOTES - PRINT QUALITY PROBLEMS

1A. Check the shims. (Refer to **Section 3, Take-Apart.**)

1B. Check the paper guide positioning. (Refer to **Section 4, Adjustments.**)

1C. Perform the ribbon adjustment. (Refer to **Section 4, Adjustments.**)

2. To check the flexible cable (printer should be off):

   a. Detach the flexible cable from the drive PCB and remove the print head.

   b. Set the digital multimeter to measure 200 ohms resistance.

   c. Check for continuity between the pins listed and shown below:

HEAD CONNECTOR	FLEXIBLE CABLE
B2	4
B3	5
B4	12
B5	13
B6	9
B7	8
B8	16
B9	1
B10	17
A2	6
A3	3
A4	14
A5	11
A6	7
A7	10
A8	18
A9	2
A10	15

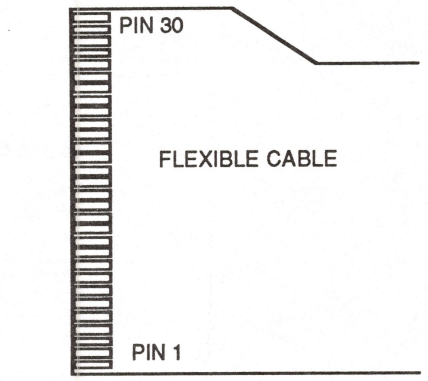

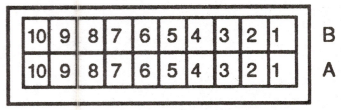

HEAD CONNECTOR TOP VIEW

3. To check the print head:

   a. Set the digital multimeter to measure 200 ohms resistance.

   b. Remove the print head and place it PCB side down with the edge connectors facing you. Place one probe on each side of the first edge finger on the right side of the print head. The resistance value should be approximately 3 ohms.

TABLE 6

FINAL TESTING

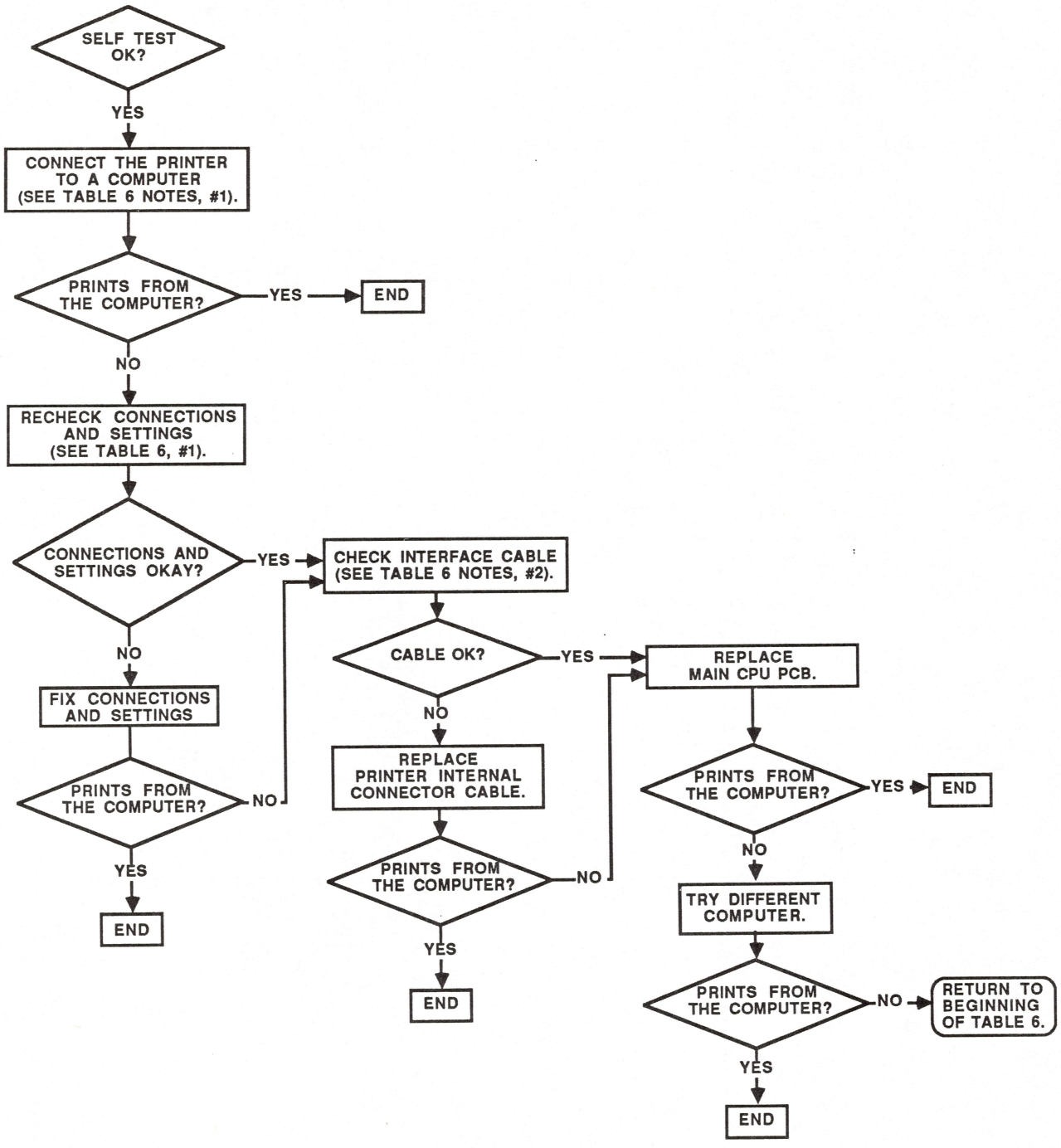

TABLE 6 NOTES - FINAL TEST

1.

IMAGEWRITER II : SWITCH SETTINGS (ENGLISH, 9600 BAUD, XON/XOFF)

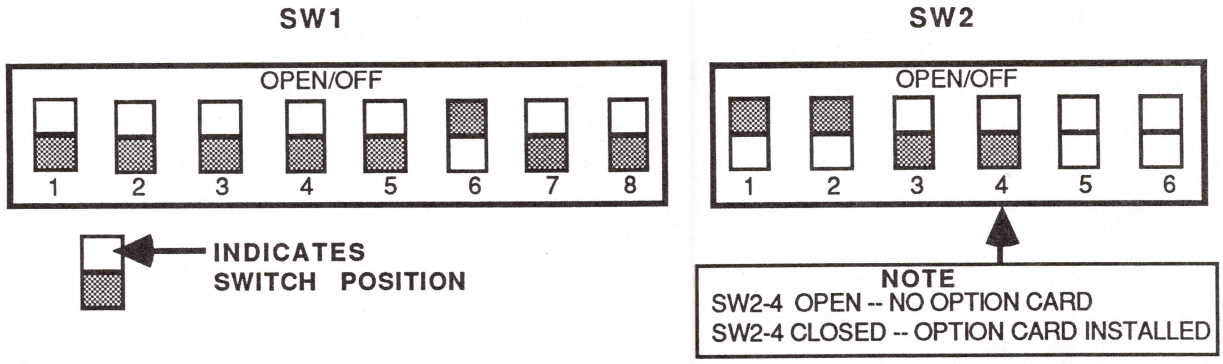

APPLE II+, IIe --SUPER SERIAL CARD SETTINGS

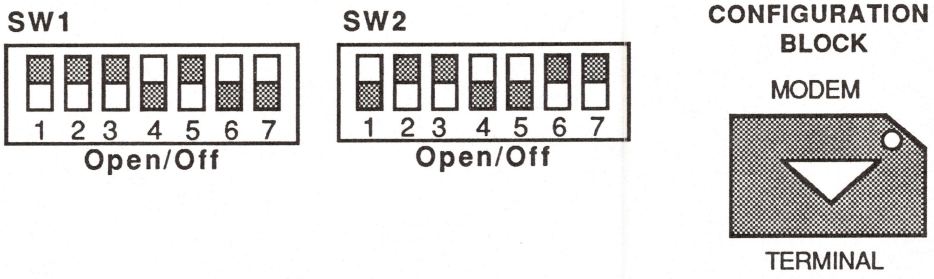

APPLE IIc

Port automatically configured for ImageWriter or ImageWriter II on power up

APPLE ///, ///+

Driver Configuration Block: [OE] [OO] [OO] [OO] [OO] [OO]

MACINTOSH

Imagewriter Driver in System Folder

2. Check the ImageWriter II Owner's Manual for more information on the correct cable to use.

TABLE 7
OPTION CARD MALFUNCTIONING

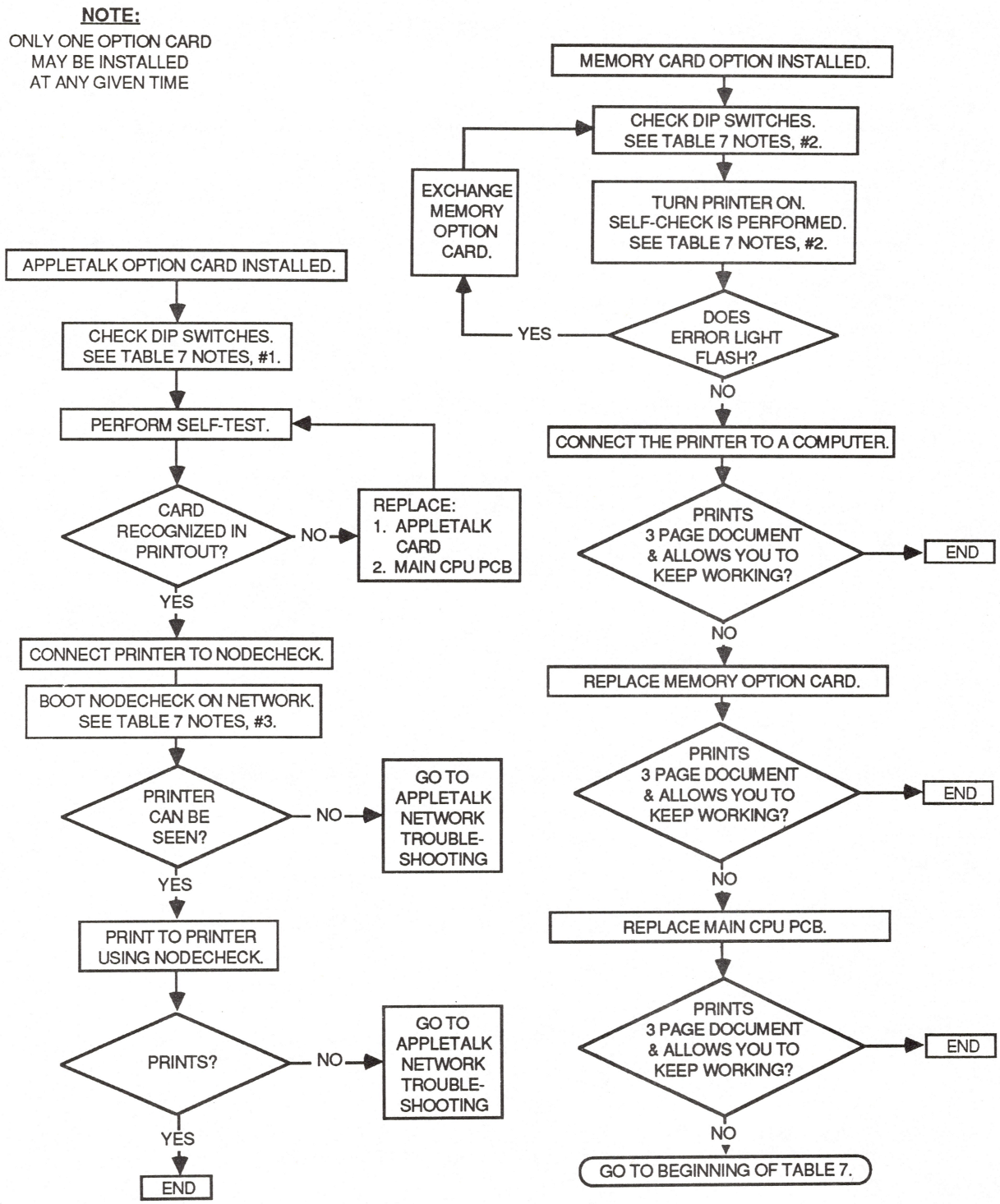

TABLE 7 NOTES - OPTION CARD MALFUNCTIONING

1. ImageWriter II switch 2-4 **MUST** be in the closed/on position when an Option Card is installed.

2. If the Memory Option Card is installed and switch 2-4 is set correctly, a RAM verification test is performed when the printer is turned on. If the printer comes ready, the RAM on the Memory Option Card is good.

3. If you do not know how to use **NodeCheck**, turn to the appropriate section under the **Networks** tab.

SYMPTOM TABLE

IMPORTANT: Check IC3 on the Drive PCB. If it is visibly blown, replace the linefeed motor, drive PCB, and CPU PCB. Failure to replace all three modules may result in additional blown modules.

SYMPTOM	CORRECTIVE ACTION
Hexadecimal data is printed	- Power the printer off then on.
Carriage doesn't move; LEDs are lit	1. Replace CPU PCB. 2. Replace Drive PCB.
Carriage doesn't move; LEDs are not lit	1. Replace Drive PCB. 2. Replace Transformer. 3. Replace Filter assembly.
Print is darker or lighter on one side	- Refer to **Section 3, Take-Apart** for removing and installing shims.
IC3 on Drive PCB is visibly blown	- Replace linefeed motor, drive PCB **AND** CPU PCB.
Compressed first or second line when printing	- Replace CPU PCB.
Carriage assembly moves to the left and does not return to the center	1. Check switch on Print Head PCB. If switch is frozen, replace print head PCB. 2. Replace CPU PCB. 3. Replace print head PCB. 4. Replace flexible cable. 5. Replace drive PCB.
Top row of dots missing on printout	- Perform Ribbon Adjustment (refer to **Section 4, Adjustments**).

SYMPTOM TABLE

SYMPTOM	CORRECTIVE ACTION
Grinding during paper feed	- Adjust the paper guide (refer to **Section 4, Adjustments**).
When printing from a Macintosh, characters sometimes appear smudged, or the top of form gradually creeps down the page in one-line increments	- Verify that the ImageWriter II driver software is the most current version. If it is not the most current version, run the most current Install program and select the ImageWriter as the print driver.
Power light on; no printing	1. Verify that the ribbon frame assembly is riding on the spiral ridge on the color ribbon cam (see **Section 4, Adjustments**). 2. Remove the dot head and verify that the pins in the connector on the dot head PCB are not bent. 3. Go to Troubleshooting Table 2.
Missing dots	1. Verify that the flexible cable is connected properly. 2. Remove the dot head and verify that the pins in the connector on the dot head PCB are not bent. 3. Go to Troubleshooting Table 5.
Power supply keeps going bad	- Verify that the cut sheet feeder wires are not pinched. If the wires are pinched, lift the chassis and reposition them.

ImageWriter II Technical Procedures

Appendix 2A

Troubleshooting

Flow of Information

Troubleshooting can be approached in many different ways. Apple recommends two methods in particular: logical troubleshooting, and module swapping in a particular order. For printers, the swapping method can prove very frustrating, so logical troubleshooting is especially helpful.

On the following pages you will find a brief description of what happens when you run the self-test on the ImageWriter II. When you troubleshoot an ImageWriter II, always attempt to run the self-test before connecting the printer to a computer. If the self-test does not run correctly, you can observe where it stops working. Knowing the flow of information, you can then isolate the problem to the faulty module.

One more thing: Before swapping modules check the ribbon cartridge and any mechanical adjustments that are possible. This may not always fix the problem, but it eliminates two possibilities right away.

FLOW OF INFORMATION

Below is a block diagram of an ImageWriter II printer. The numbers on the block diagram indicate the order in which the self-test takes place and correspond to the numbers on the descriptions that follow.

IMAGEWRITER II (Serial)

Flow of Information During Self Test

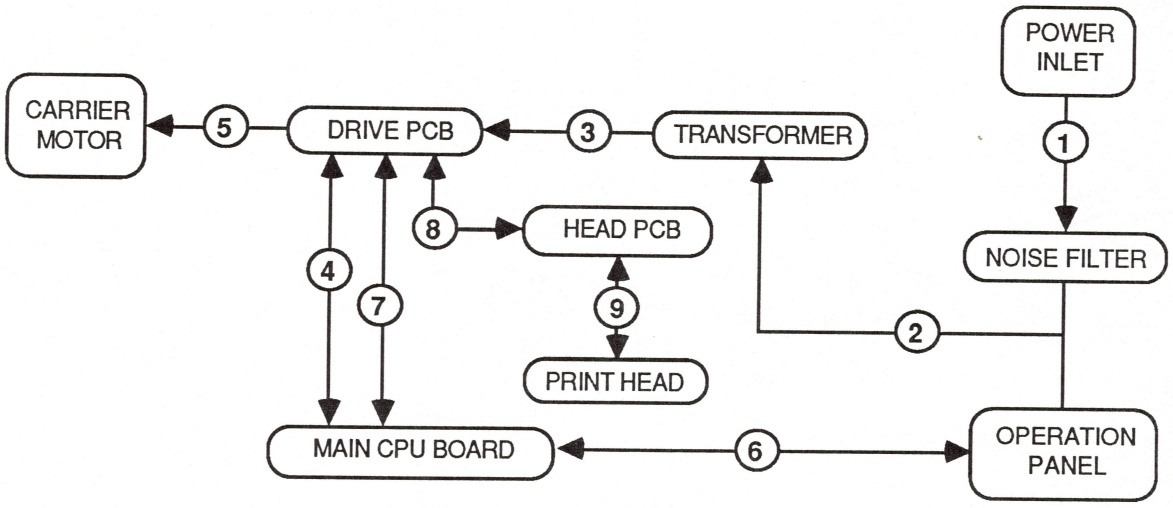

1. The AC power cord is plugged into a wall socket and into the power inlet on the right support leg.

2. The power switch on the operation panel is turned on and the form feed switch is held down. The AC voltage and current is passed through the filter to reduce Radio Frequency Interference (RFI) to FCC standards. The 120 volts is sent to the transformer, where it is reduced to 40 volts.

3. The 40 volts is sent to the drive PCB. Here the voltage is broken down and sent to the various parts which need it. The drive PCB contains the power supply and all of the motor and print head drive circuitry. The drive circuitry controls the firing of the hammer and limits the current to the print head.

4. The necessary voltages are sent to the logic board and the startup sequence (stored in ROM on the logic board) is accessed. The logic board sends startup instructions to the drive PCB.

5. The drive PCB accesses the carrier motor. The carrier motor centers the carrier assembly. The carrier motor moves the carriage assembly back and forth when printing.

6. The form feed switch is released, notifying the main CPU board that the self-test is to be performed.

7. The main CPU board notifies the drive PCB that the self-test is to be performed. The drive PCB notifies the carrier motor.

8. The drive PCB takes the self-test information and sends it to the print head PCB mounted underneath the carrier assembly.

9. The print head PCB activates the print head and the self-test is performed. The printer will continue to run the self-test until powered off.

ImageWriter II Technical Procedures

Section 3

Take-Apart

WARNING: For all take-apart procedures the printer should be off and the AC power cord should be disconnected.

Contents:

For a complete list of tools and materials needed see **Section 1, Basics.**

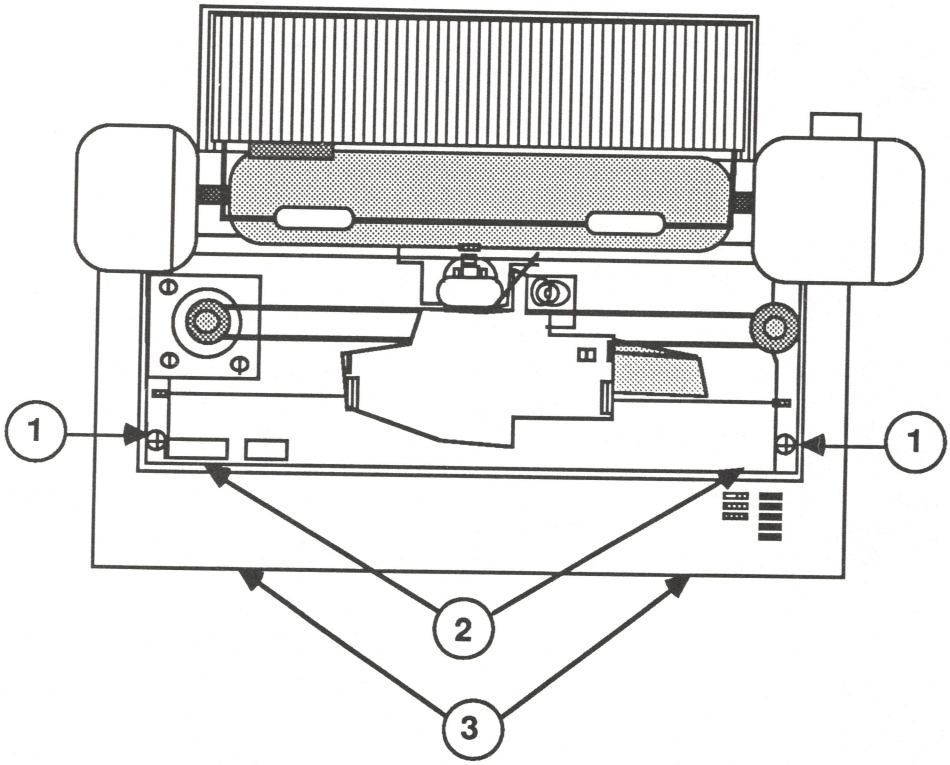

FIGURE 1

REMOVE AND REPLACE TOP COVER

For these procedures you will need:

A #2 Phillips screwdriver

Remove

1. Remove the paper cover and the ribbon cartridge.
2. Push the carrier assembly to the far left.
3. Loosen the two screws as far as they will go (see Figure 1, #1).
4. Place your fingers over the edge designated by Figure 1, #2, and your thumbs at the location designated by Figure 1, #3. Gently pull the cover up and towards you with your fingers until it snaps free. Do not attempt to remove the cover until after the next step.
5. Lift the right hand side of the cover to gain access to the connector. Unplug the connector running from the control panel board to the main CPU PC board. Remove the connector from the main CPU PC board.
6. Remove the top cover.

Replace

1. Push the carrier assembly to the left.
2. Lay the cover in place and lift the right hand side. Plug in the connector to the main CPU PC board.
3. Tilt the cover towards you till the front edge is in place.
4. Push down the cover. You will hear a "snap" as it goes into place.
5. Tighten the two screws (see Figure 1, #1).
6. Replace the ribbon cartridge and the paper cover.
7. Perform the self test.

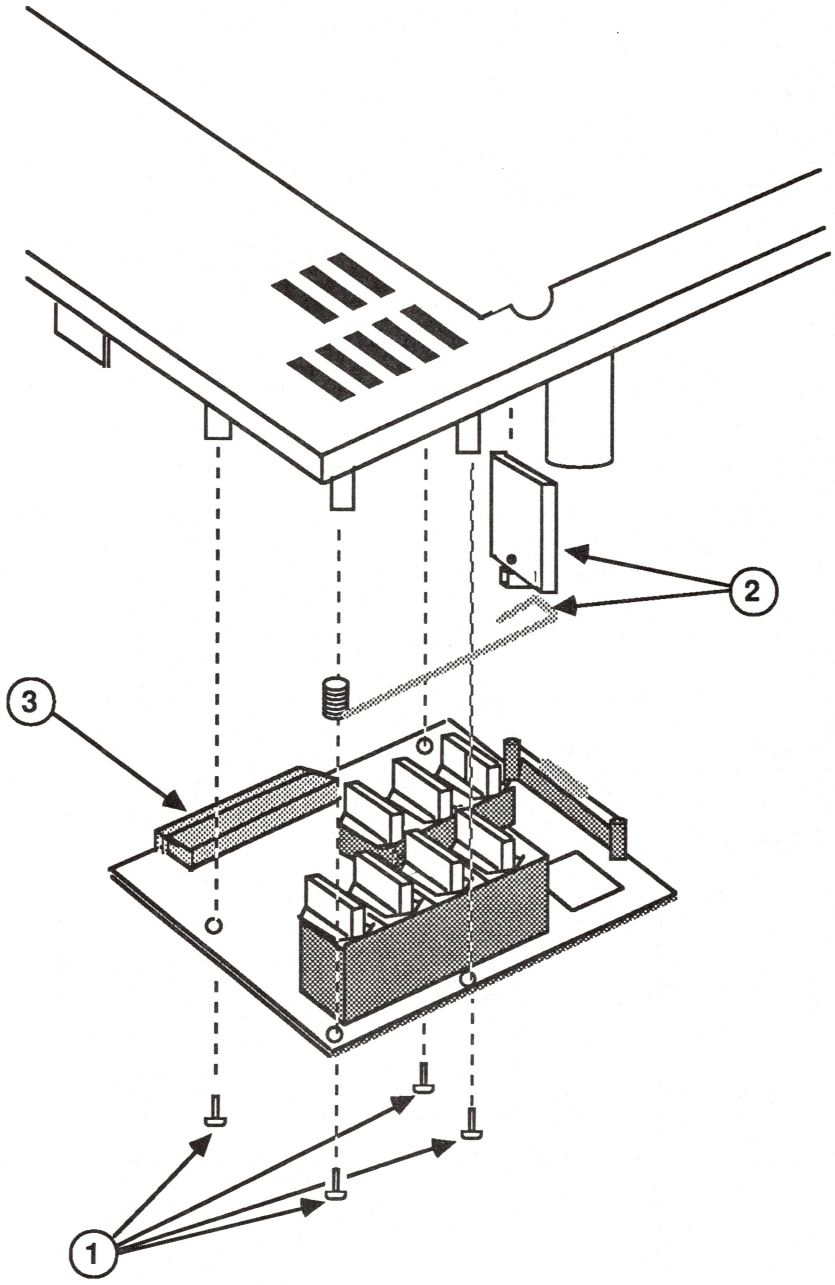

FIGURE 2

REMOVE AND REPLACE OPERATIONAL PANEL

For these procedures you will need:

A #2 Phillips screwdriver
A small Phillips screwdriver

Remove

1. Remove the paper cover.
2. Remove the top cover.
3. Remove the four screws holding the operation panel (see Figure 2, #1).
4. Lift the operation panel from the top cover. Remove the power button and spring (see Figure 2, #2).
5. Unplug the cable from the switch assembly panel (see Figure 2, #3).

Replace

1. Place the top cover upside down.
2. Connect the power button and spring (see Figure 2, #2) by placing the coiled half of the spring over the outer corner screw mount, and the button in the top opening on the cover.
3. Plug in the cable to the operation panel (see Figure 2, #3).
4. Line up the screw mounts with the holes on the panel, switch side down.
5. Replace the four screws (see Figure 2, #1).
6. Replace the top cover.
7. Replace the paper cover.
8. Perform the self-test.

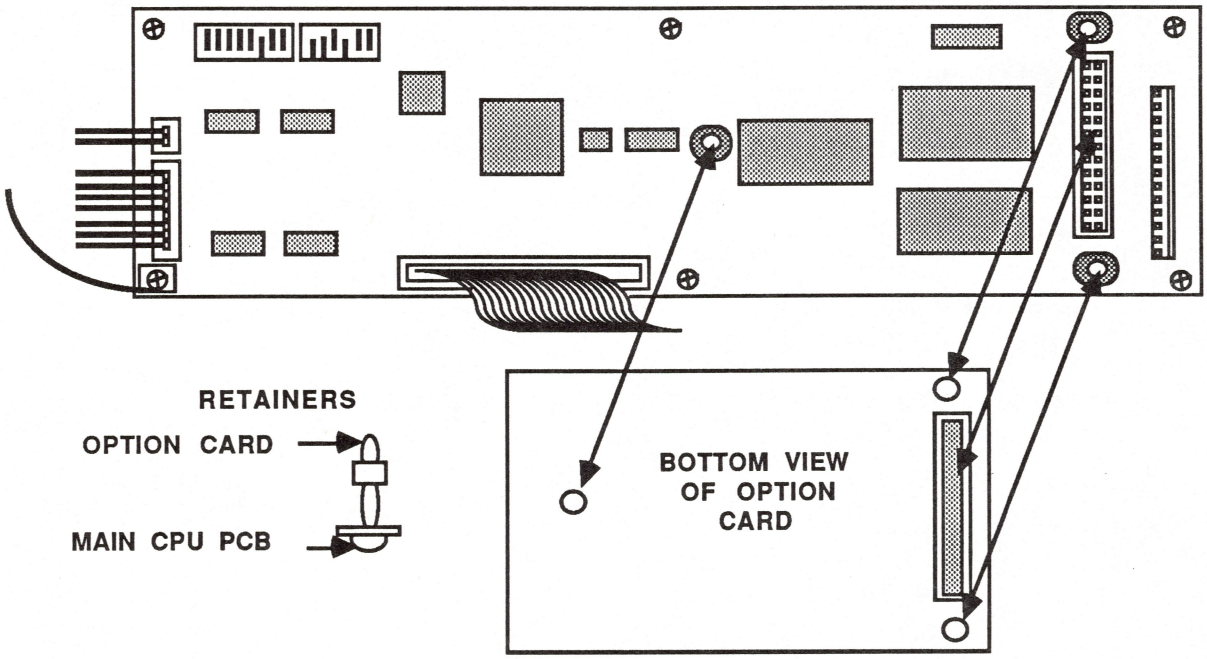
RETAINERS
OPTION CARD
MAIN CPU PCB
BOTTOM VIEW
OF OPTION
CARD

FIGURE 3

REMOVE AND REPLACE OPTION CARD

For these procedures you will need:

Small pair of curved point needlenose pliers

Remove

1. Remove the paper cover.
2. Remove the top cover.
3. Squeeze the plastic retainers (see Figure 3) together one at a time with the pliers and gently lift the corners of the option card.
4. Lift out the option card.

Replace

1. Position the option card above the plastic retainers and line up the connector from the option board with the one on the main CPU PCB.
2. Push down the option card. It will snap into place.
3. Replace the top cover.
4. Perform the self test.

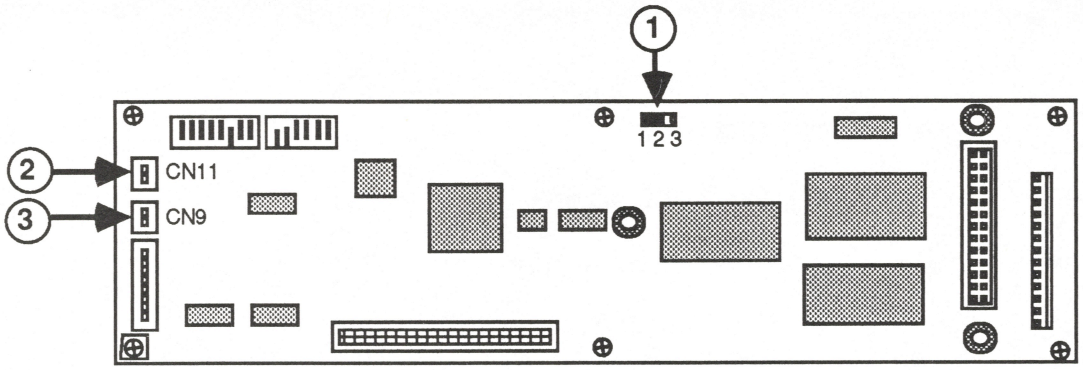

FIGURE 4A

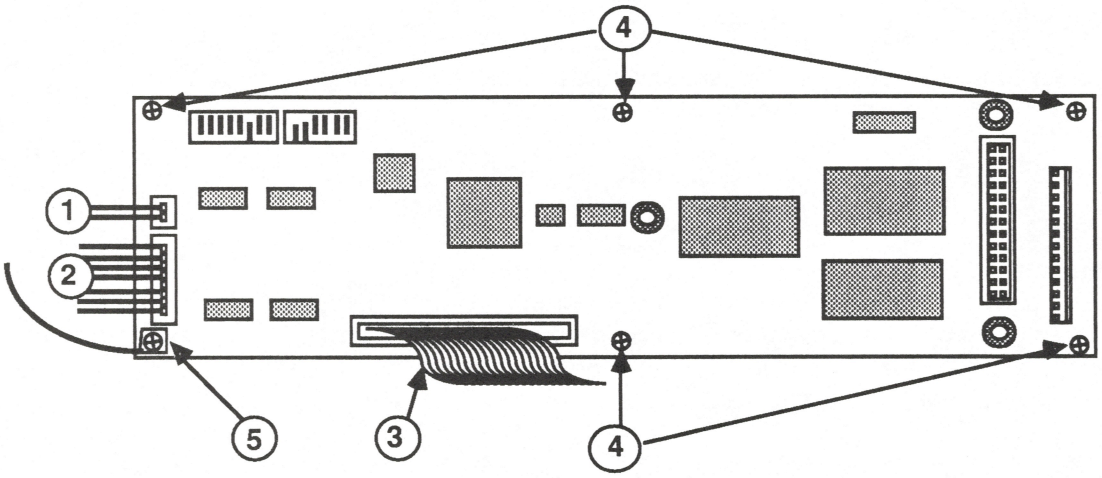

FIGURE 4B

REMOVE AND REPLACE MAIN CPU PCB

For these procedures you will need:

A #2 Phillips screwdriver, magnetized

There are two versions of the main CPU PCB. The type of main CPU PCB installed in a machine is directly related to the type of paper sensor that is installed. For compatibility information, refer to Section 0, Service Notes.

The new logic board (Figure 4A) has

- A selector switch that allows this board to be used with both the mechanical and the optical paper sensor (Figure 4A, #1). If a mechanical paper sensor is installed, the jumper should be on pins 1 and 2. If an optical paper sensor is installed, the jumper should be on pins 2 and 3.

- An extra connector, CN11, that is used for the optical paper sensor (Figure 4A, #2). Connector CN9 is used for the mechanical paper sensor (Figure 4A, #3).

- A new ROM version that supports both paper sensors.

Remove

1. Remove the paper cover.
2. Remove the top cover.
3. Remove the option card if it is installed.
4. Remove the three connectors (Figure 4B: #1 is a two-pin, #2 is an 8-pin, #3 is a 50-pin ribbon cable).
5. Remove the five screws (Figure 4B, #4).
6. Remove the sixth screw holding the grounding strap (Figure 4B, #5).
7. Tilt the front half of the board up. Lift the board out of the printer.

Replace

1. Tilt the front half of the board up. Lower the board onto the screw mounts.
2. Install the five screws (Figure 4B, #4).
3. Install the sixth screw holding the grounding strap (see Figure 4B, #5)
4. Plug in the three connectors (Figure 4B, #1, #2, and #3).
5. Install the option card if it is included.
6. Replace the top cover.
7. Replace the paper cover.
8. Perform the self-test.

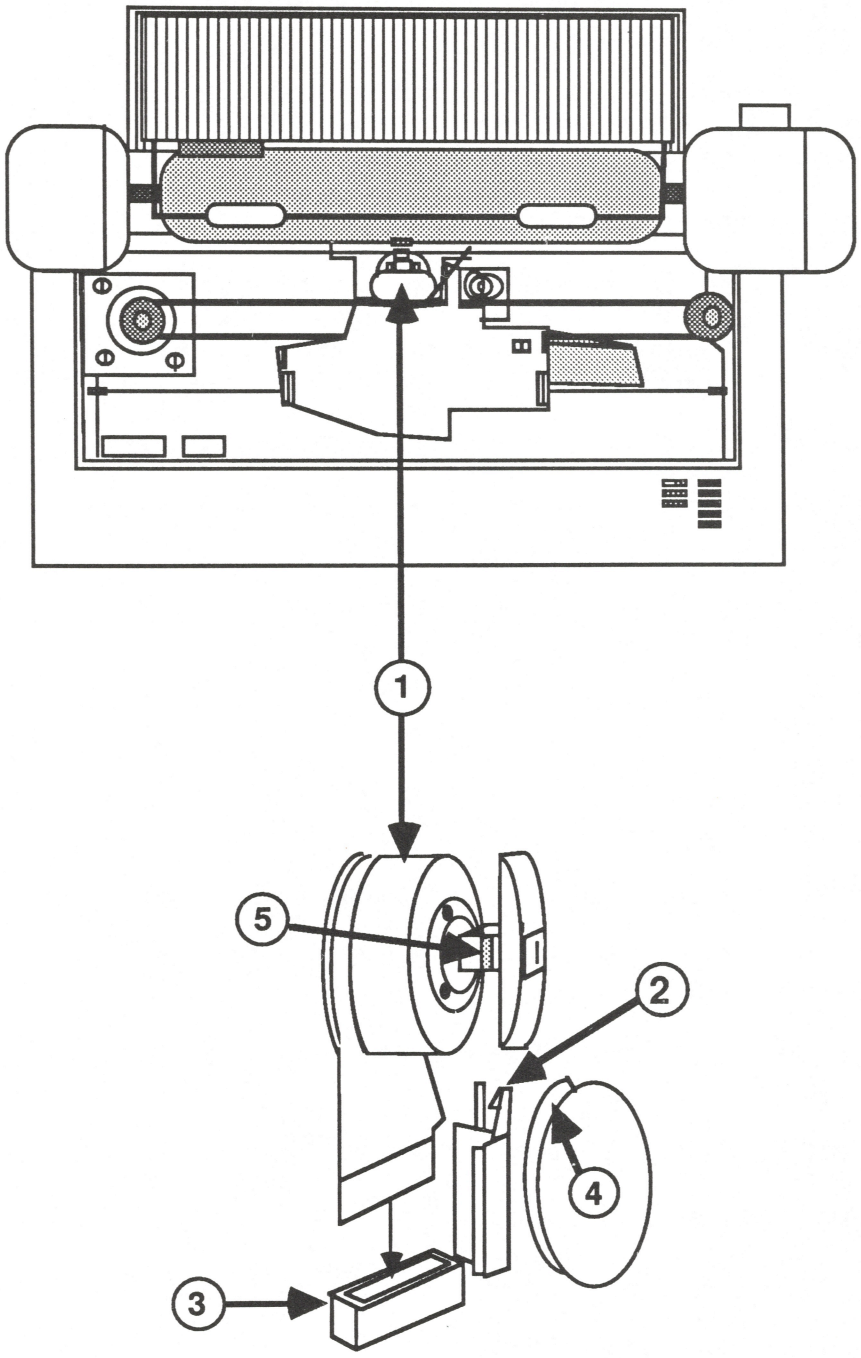

FIGURE 5

REMOVE AND REPLACE PRINT HEAD

Remove

1. Remove paper cover.
2. Remove ribbon cartridge.
3. Locate the print head (see Figure 5, #1).
4. Gently push aside the white clip (see Figure 5, #2), grasp the print head and slowly lift it straight up and out of the connector.

Replace

1. Line the metal connector "fingers" of the print head up with the connector (see Figure 5, #3).
2. Line the front oblong portion up so that it goes between the clear plastic card holder covering the platen (see Figure 5, #4) and the print head clamp (see Figure 5, #2). The print head clamp goes over the indentations on the print head (see Figure 5, #5).
3. Gently push the print head down until it is firmly seated.
4. Replace the ribbon cartridge.
5. Replace the paper cover.
6. Perform the self test.

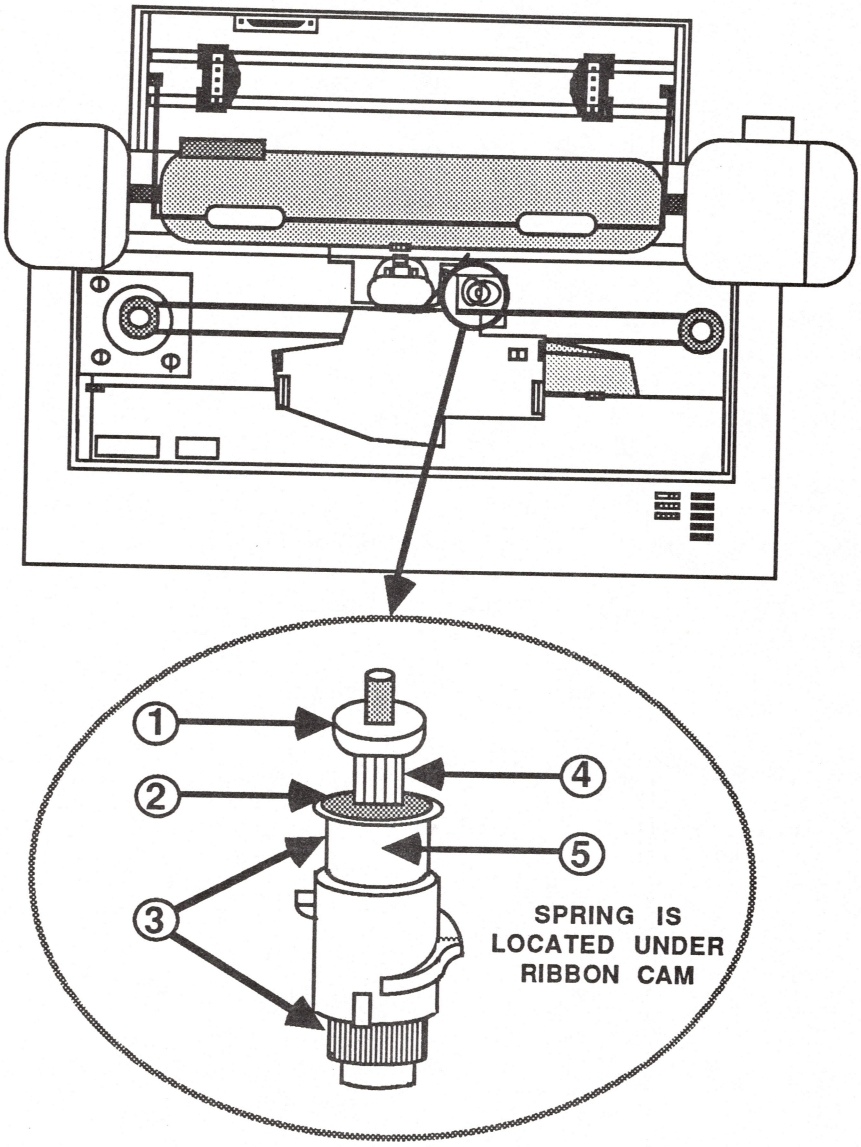

FIGURE 6

REMOVE AND REPLACE COLOR RIBBON ASSEMBLY

For these procedures you will need :

A small pair of needlenose pliers

Remove

1. Remove the paper cover.
2. Remove the top cover.
3. Remove the lock nut (See Figure 6, #1).
4. Remove the retaining clip with a pair of small needlenose pliers (see Figure 6, #2) and take off the two washers.
5. Lift off the ribbon cam (see Figure 6, #3), turning it until it is free from the ribbon plate.
6. Remove the adjustment nut (see Figure 6, #4).
7. Remove the spring (see Figure 6, #5).

Replace

1. Replace the spring (see Figure 6, #5).
2. Replace the adjustment nut (see Figure 6, #4).
3. Slide on the ribbon cam (see Figure 6, #3) so that the ridge on the cam is between the two tabs on the ribbon plate.
4. Replace the two washers and the retaining clip (see Figure 6, #2).
5. Replace the lock nut (see Figure 6, #1).
6. Turn to **Section 4, Adjustments.** Perform the color printing adjustment.

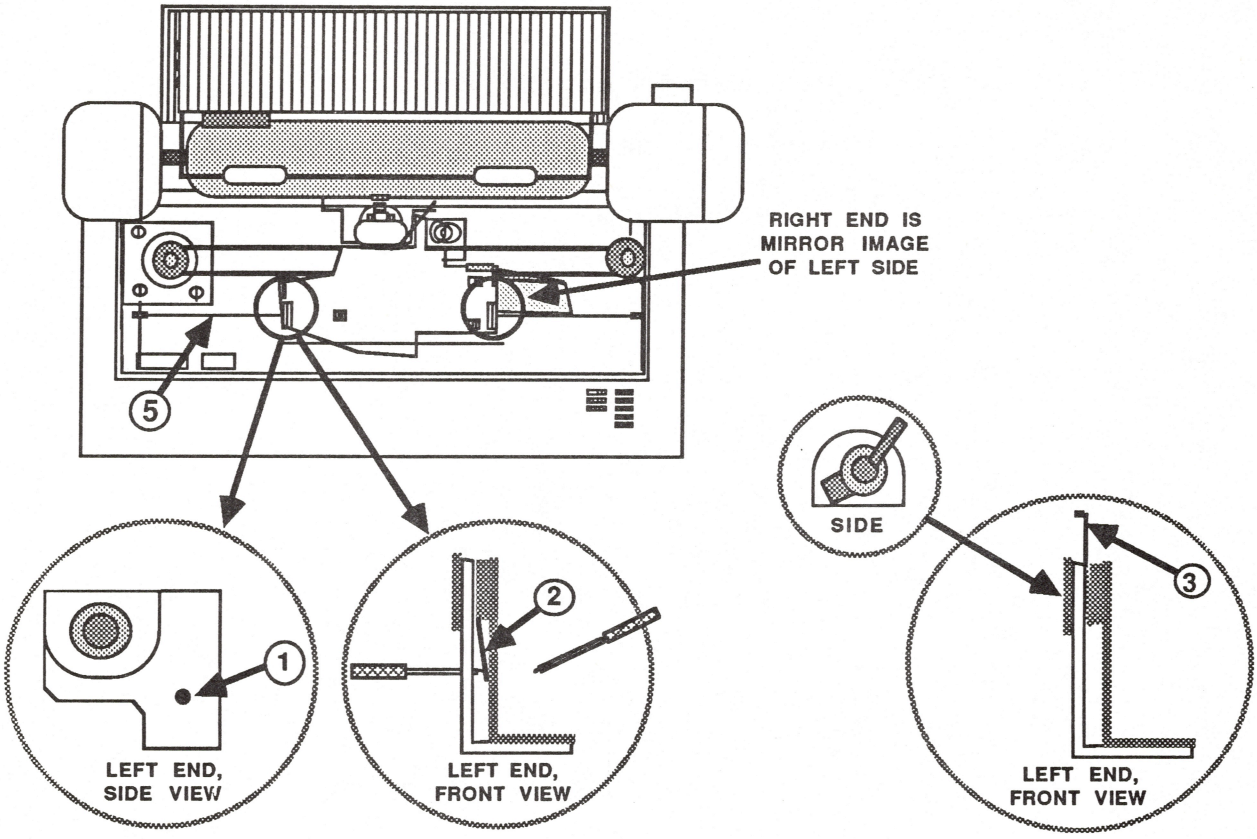

FIGURE 7

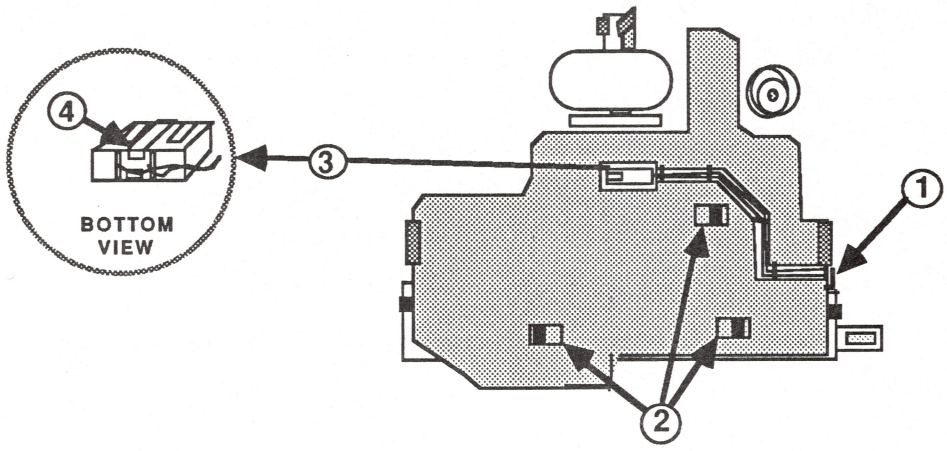

FIGURE 8

REMOVE AND REPLACE RIBBON WIRE AND RIBBON ASSEMBLY

For these procedures you will need:

3 jeweler's flathead screwdrivers

IMPORTANT: Do not use force when removing the black plastic catches. Force will result in breaking the catch. The black catches are not interchangeable. Follow the procedures exactly as written.

Remove

1. Remove paper cover.
2. Remove top cover.
3. Remove ribbon cartridge.
4. Locate the holes on the sides of the carrier assembly (see Figure 7, #1).
5. Gently insert a jeweler's flathead screwdriver into the hole (see Figure 7, #1). The black catch will come out (see Figure 7, #2). Gently pry the catch upwards at a slight angle with another jeweler's flathead screwdriver.
6. Move the small catch to the top (see Figure 7, #3). Gently pull the plastic piece straight out.
7. Repeat for the right side. **These pieces are not interchangeable.**
8. Remove the color ribbon selector wires from the plastic clamp which is located on the side of the carrier assembly (see Figure 8, #1) by gently prying the clamp away from the carrier assembly.
9. Using a jeweler's flathead screwdriver push the tabs towards the center of the ribbon plate (see Figure 8, #2).
10. Slowly lift the entire plate up. If the ribbon wire (see Figure 7, #5) attempts to come with it, repeat step 9. The gears are located under the plate.
11. Lay the ribbon plate upside down to remove the color ribbon detect switch (see Figure 8, #3). Do not remove the switch unless replacing the ribbon plate.

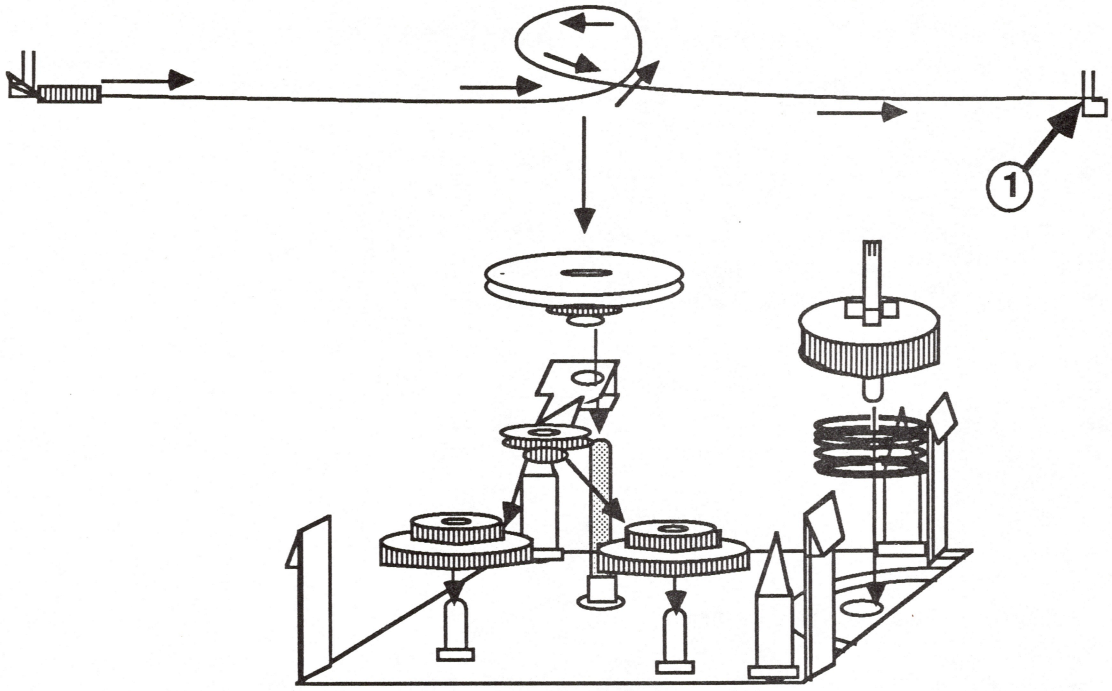

FIGURE 9

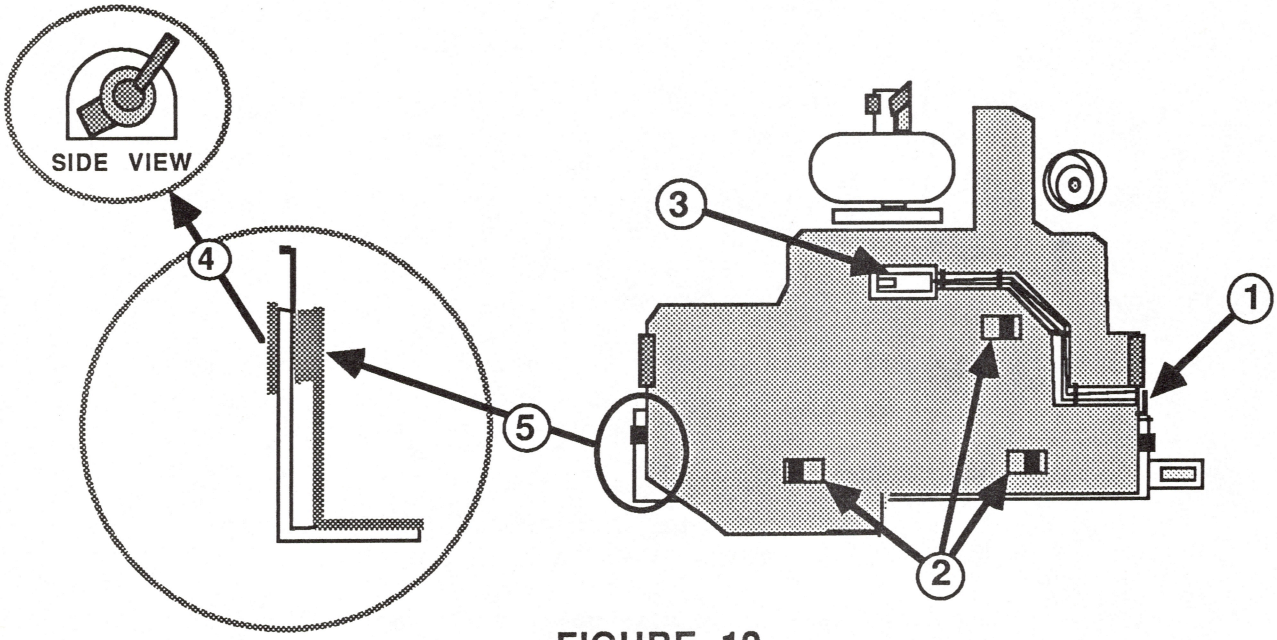

FIGURE 10

12. Insert a jeweler's flathead screwdriver under the tab on each side of the detect switch (see Figure 8, #4).

13. Gently push the switch down with a third jeweler's flathead screwdriver.

14. Remove the wires from the retainers on the front of the ribbon plate.

15. Place the ribbon plate aside.

16. Disconnect and remove the ribbon wire (see Figure 9, #1).

Replace

1. Rewrap the ribbon wire as shown in Figure 9. Be sure the wire crosses at the front of the gear.

2. Gently position and push the ribbon detect switch into the top of the ribbon plate (see Figure 10, #3).

3. Reinstall the wires under the retainers and the bracket (see Figure 10, #1).

4. Position the ribbon plate so the front two tabs on the side have the ridge from the color ribbon assembly between them. Line up the tabs on the gear plate with the top of the ribbon plate (see Figure 10, #2), and push the ribbon plate down. It will click into position.

5. Replace the two small plastic pieces with the catches on them. These pieces are not interchangeable. One is made for the left and one for the right of the carrier assembly. Slide the piece for the left side (see Figure 10, #4) over the left side of the ribbon plate and carrier assembly. Rotate the piece until the black catch pops into the hole on the carrier assembly (see Figure 10, #5). Repeat this step for the other piece (on the right side).

6. Replace the ribbon cartridge.

7. Replace the top cover.

8. Replace the paper cover.

9. Perform the self test.

REMOVE AND REPLACE FLEXIBLE CABLE

For these procedures you will need:

A 1/8 inch flathead screwdriver

IMPORTANT: Do not force the flexible cable loose. This could cause damage to the cable.

NOTE: There are two types of ribbon retainer: one type is held in position by a screw (see Figure 12a, #1), the other by a metal tab which is part of the frame (see Figure 12b, #1). The following procedures refer to screw-fastened retainers. If you are working with the tab-fastened type, just ignore the references to the screw. (The tab-fastened retainer can simply be pulled free and removed.)

CARRIAGE ASSEMBLY
WITH RIBBON WIRE AND ASSEMBLY REMOVED

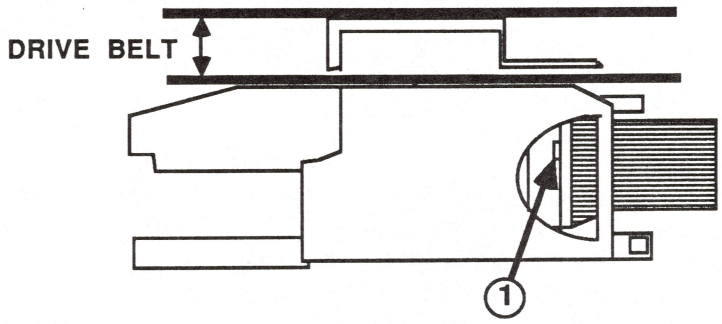

FIGURE 11

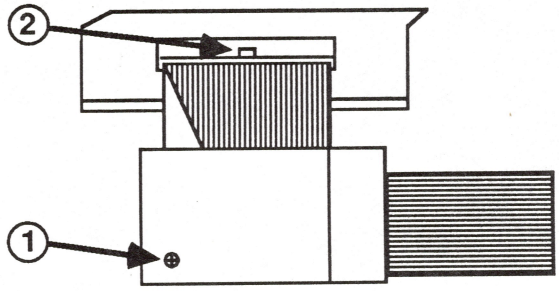

FIGURE 12a

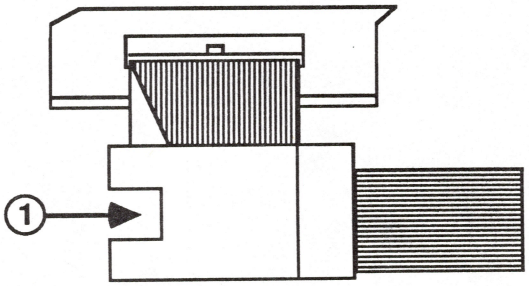

FIGURE 12b

Remove

1. Remove the ribbon wire and ribbon assembly.

2. Insert the flathead screwdriver into the notch on the flexible cable connector (see Figure 11, #1). Gently turn the screwdriver and the connector will pop out about 1/4 inch.

3. Remove the flexible cable from the connector.

4. Push the carriage assembly to the far left. Remove the screw that holds the ribbon retainer in place (see Figure 12a, #1).

5. Insert the flathead screwdriver into the notch on the connector located on the drive PCB (see Figure 12a, #2). Gently turn the screwdriver and the connector will pop out about 1/4 inch.

6. Remove the flexible cable from the connector and set it aside.

Replace

1. Insert the flexible cable into the connector on the drive PCB (see Figure 12A, #2). Push the connector in.

2. Replace the ribbon retainer and the screw that holds down the retainer for the flexible cable (see Figure 12a, #1).

3. Push the carriage assembly to the middle. Insert the other end of the flexible cable into the connector (see Figure 11, #1). Push the connector in.

4. Replace the ribbon wire and the ribbon assembly.

5. Perform the self-test.

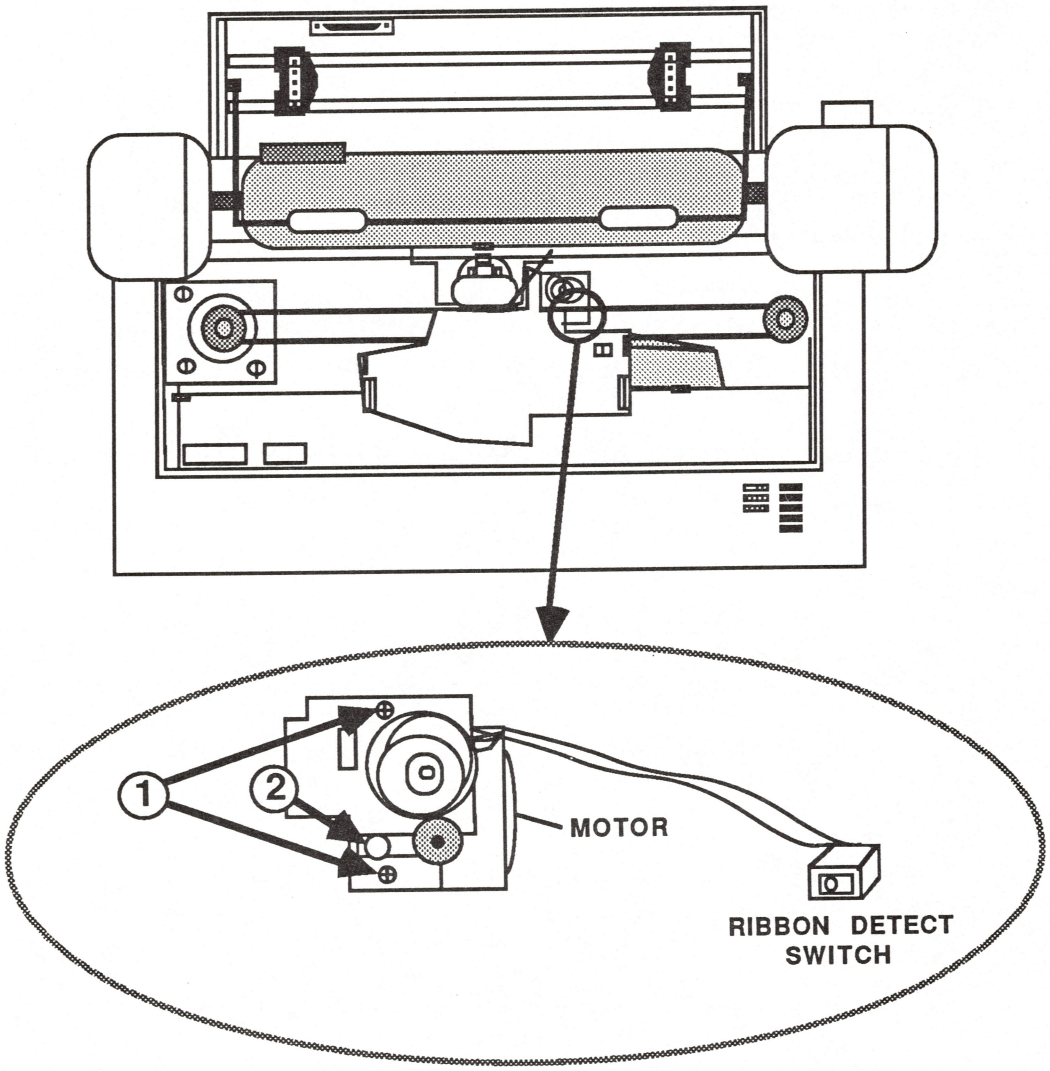

FIGURE 13

REMOVE AND REPLACE RIBBON MOTOR ASSEMBLY

For these procedures you will need:

A jeweler's flathead screwdriver
A #2 Phillips screwdriver, magnetized

Remove

1. Remove the ribbon wire and the ribbon assembly.
2. Remove the two screws that hold the motor in place (see Figure 13, #1).
3. Position the jeweler's flathead screwdriver behind the small black plastic extension as shown in Figure 13, #2. Gently pry the motor out.
4. Note the position of the connector and the wires on the ribbon motor assembly.

Replace

1. Slide the ribbon motor into position (see Figure 13).
2. Replace the two screws that hold the motor in place (see Figure 13, #1).
3. Replace the ribbon wire and the ribbon assembly.
4. Perform the self test.

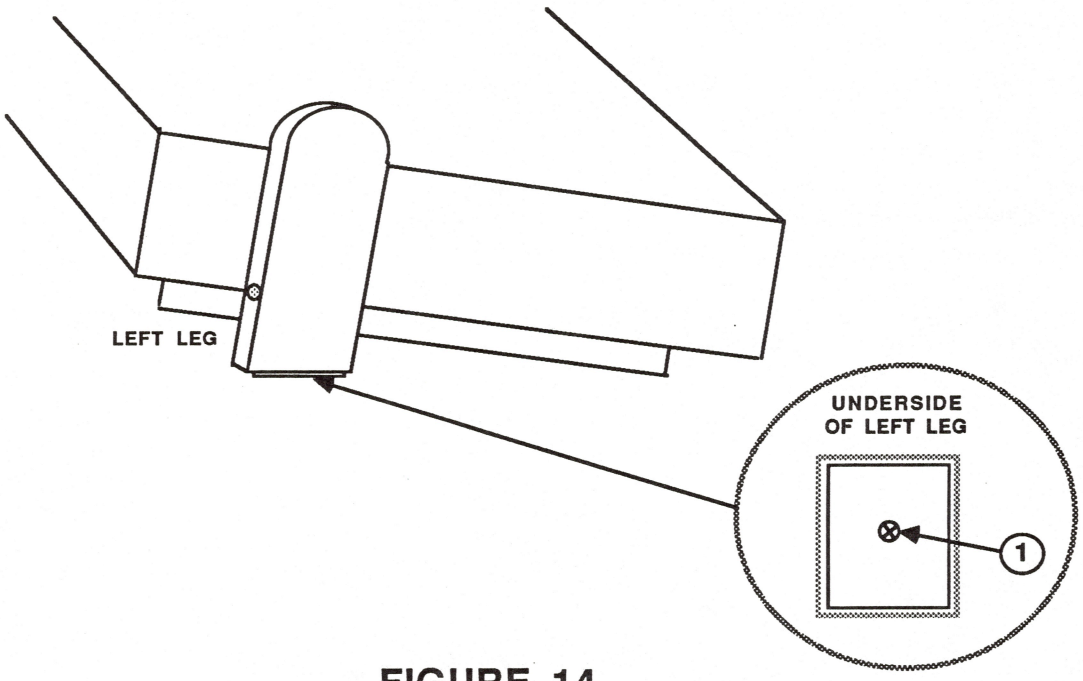

FIGURE 14

REMOVE AND REPLACE LEFT SUPPORT LEG

For these procedures you will need:

A #2 Phillips screwdriver, magnetized

Remove

1. Remove the paper cover.
2. Turn the machine upside down.
3. Remove the Phillips screw at the base of the left leg (see Figure 14, #1).
4. Turn the machine right side up.
5. The interface cable connector slides in and out of two notches on the inside of the leg. Push down on the leg and slide it off the plastic frame. The interface connector will slide off as the leg is removed.

Replace

1. With the machine right side up, slide the interface connector into the notches on the inside of the leg.
2. Push the leg into position.
3. Pull upward on the leg to lock it in place.
4. Turn the printer upside down and replace the Phillips screw (see Figure 14, #1).
5. Replace the paper cover.
6. Perform the self test.

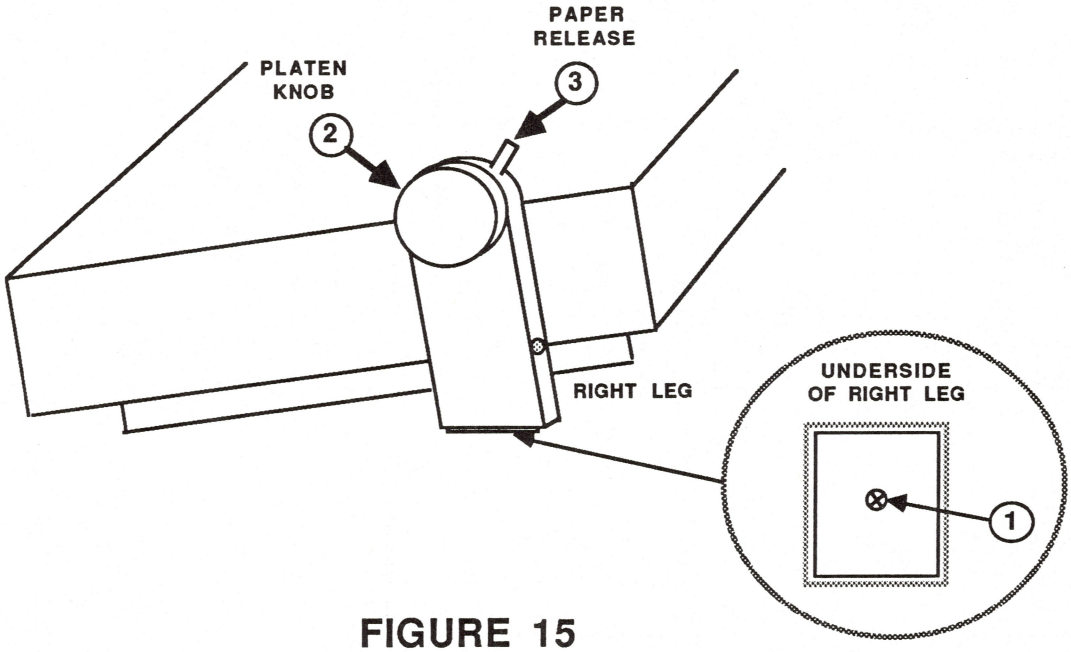
PAPER
RELEASE
PLATEN
KNOB
3
2
RIGHT LEG
UNDERSIDE
OF RIGHT LEG
1

FIGURE 15

REMOVE AND REPLACE RIGHT SUPPORT LEG

For these procedures you will need:

A #2 Phillips screwdriver, magnetized

Remove

1. Remove the paper cover.
2. Turn the machine upside down.
3. Remove the Phillips screw at the base of the right leg (see Figure 15, #1).
4. Turn the machine right side up and grasp the platen knob and gently pull it off (see Figure 15, #2).
5. Slide the paper release lever off (see Figure 15, #3).
6. The AC power inlet connector is located inside and is not physically mounted to this leg. Push down and slide the right leg off the plastic frame.

Replace

1. With the printer right side up, slide the AC connector into the notches.
2. Push the leg into position.
3. Pull upward on the leg to lock it in place.
4. Slide the paper release lever on (see Figure 15, #3).
5. Line up the platen knob and push into position (see Figure 15, #2).
6. Turn the machine upside down and replace the Phillips screw (see Figure 15, #1).
7. Replace the paper cover.
8. Perform the self test.

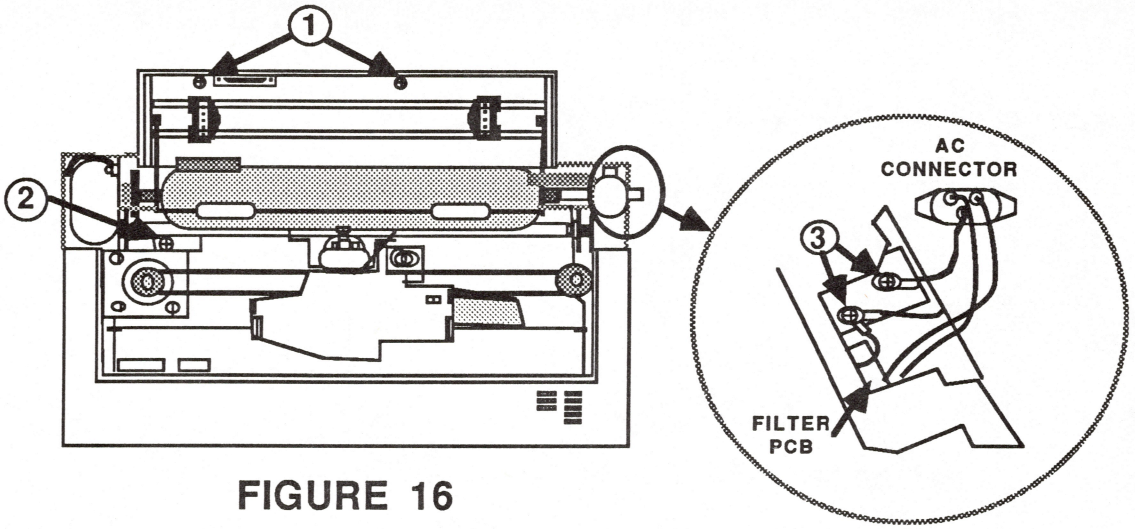

FIGURE 16

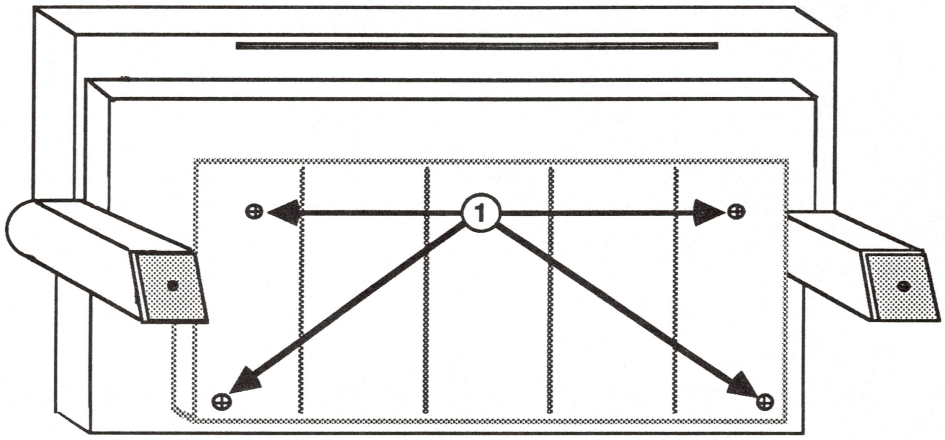

FIGURE 17

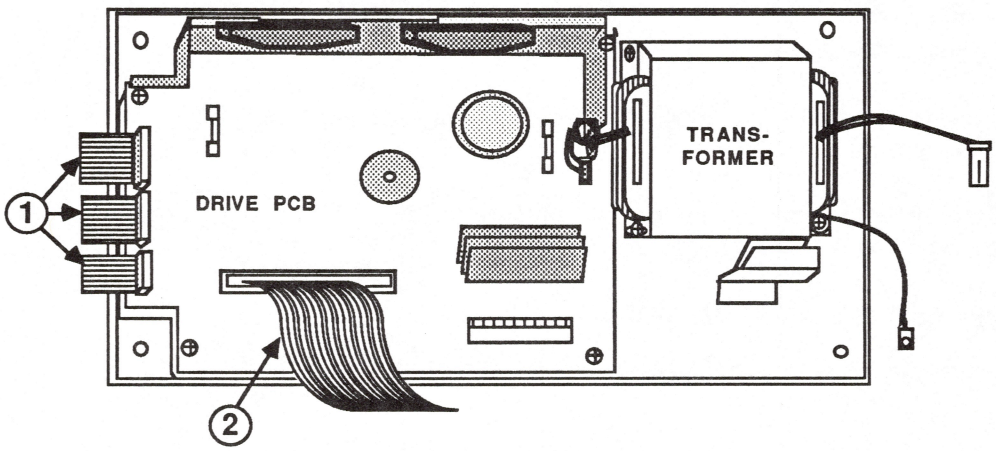

FIGURE 18

REMOVE AND REPLACE BOTTOM COVER

For these procedures you will need:

A #2 Phillips screwdriver, magnetized
A small Phillips screwdriver, magnetized
A flathead screwdriver

Remove

1. Remove the paper cover.
2. Remove the tractor cover.
3. Remove the left and right legs.
4. Remove the two screws located under the tractor cover, pictured in Figure 16, #1.
5. Remove the grounding connector from the spade on the drive PCB (see Figure 16, #2).
6. Remove the two grounding screws located in the right support leg (see Figure 16, #3).
7. Push the carriage assembly to the far left. Remove the flexible cable from the drive PCB.
8. Turn the printer upside down and loosen the four screws as far as they will go (see Figure 17, #1).

IMPORTANT: The power supply assembly has four cable connectors and one plug connector which need to be disconnected before removing the bottom cover.

9. Using a small flathead screwdriver, gently pry up the left side of the bottom cover. Lift the left side of the access cover about 3 inches -- until you can reach the three connectors located on that side of the board. Disconnect the three connectors. (See Figure 18, #1.)
10. Lift the front half of the bottom cover and disconnect the large gray ribbon cable connector (see Figure 18, #2).
11. Carefully lift the bottom cover from the back and flip the bottom cover towards the front.

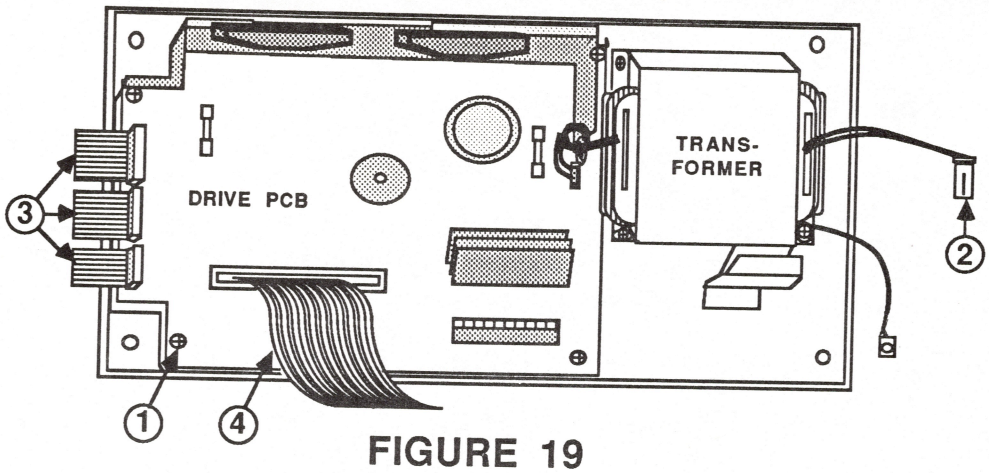

FIGURE 19

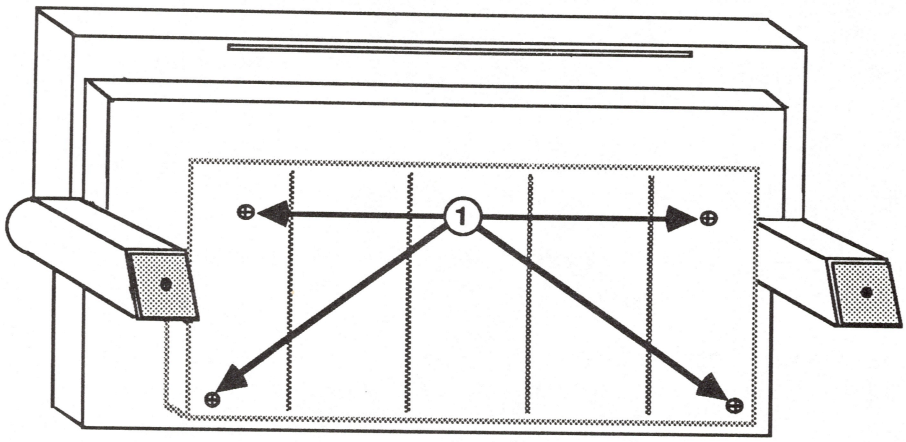

FIGURE 20

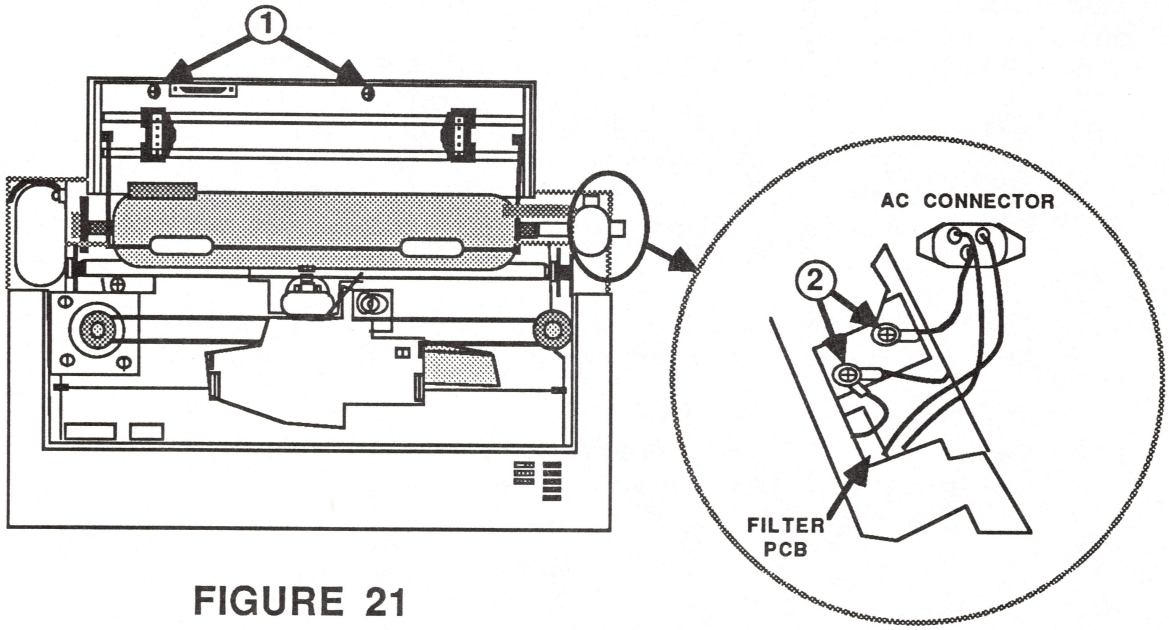

FIGURE 21

12. Disconnect the plug cable running from the right leg to the transformer on the bottom cover (see Figure 19, #2).

13. Remove the bottom cover.

Replace

1. Place the bottom cover face up on the bottom of the printer.

2. Connect the plug cable running from the right leg to the bottom cover (see Figure 19, #2).

3. Flip the bottom cover into place, lift the left hand side of the bottom cover and connect the three connectors (see Figure 19, #3).

4. Lift the rear portion of the bottom cover, and connect the large gray ribbon cable (see Figure 19, #4).

5. Route the grounding strap from the transformer into the right support leg.

6. Check for any crimped wires or cables. Tilt the bottom cover towards you and lower it into place.

7. Replace the four screws that hold the bottom cover in place (see Figure 20, #1).

8. Turn the printer right side up.

9. Connect the grounding connector to the spade on the corner of the drive PCB (see Figure 19, #1).

10. Replace the two screws pictured in Figure 21, #1.

11. Reconnect the three grounding straps and two screws into the right support leg (see Figure 21, #2).

12. Push the carrier assembly to the far left and connect the flexible cable to the drive PCB.

13. Replace the left and right support legs.

14. Replace the tractor cover.

15. Replace the paper cover.

16. Perform the self test.

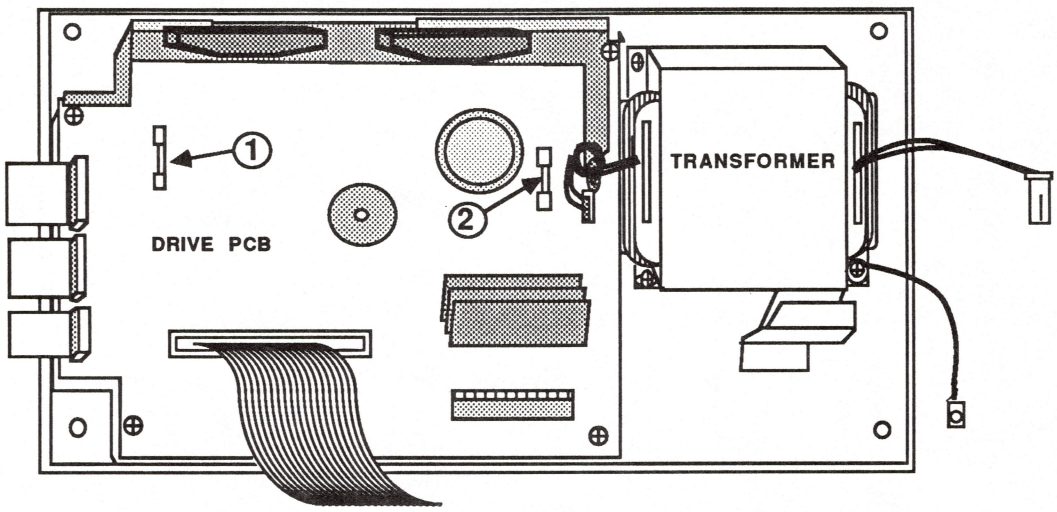

FIGURE 22

REMOVE AND REPLACE FUSES

For these procedures you will need:

Fuse puller
Digital multimeter

There are two fuses located on the drive board on the bottom cover. Check the fuses to verify that they are good. If a fuse is bad replace it.

1. Remove the bottom cover.

2. Examine the fuses for burn marks. If possible check them with a multimeter (See **Section 2, Troubleshooting**).

   Fuse 1 (see Figure 22, #1) is a 1 AMP fuse.

   Fuse 2 (see Figure 22, #2) is a 5 AMP fuse.

3. Replace any defective fuses.

4. Replace the bottom cover.

5. Perform the self test.

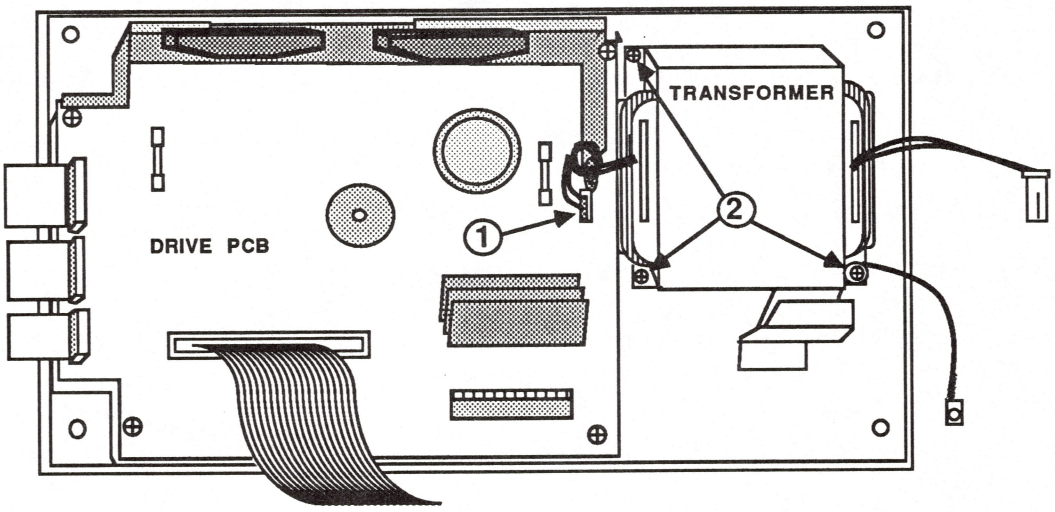

FIGURE 23

REMOVE AND REPLACE THE TRANSFORMER

For these procedures you will need:

A #2 Phillips screwdriver

Remove

1. Remove the bottom cover.
2. Disconnect the cable to the drive PCB (see Figure 23, #1).
3. Remove the three screws (see Figure 23, #2).
4. Lift out the transformer.

Replace

1. Place the transformer on the bottom cover, so that the screw holes line up.
2. Replace the three screws (see Figure 23, #2).
3. Connect the cable to the drive PCB (see Figure 23, #1).
4. Replace the bottom cover.
5. Perform the self test.

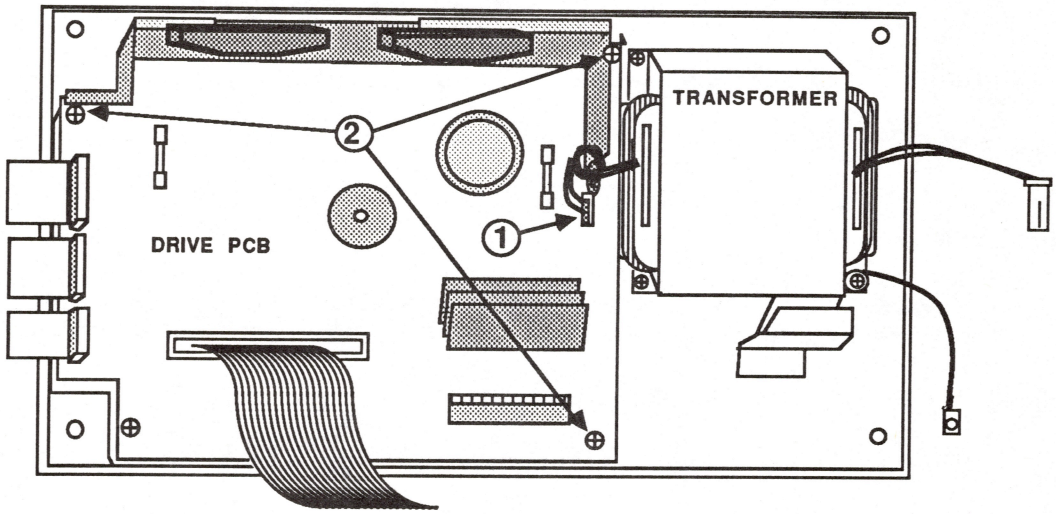

FIGURE 24

REMOVE AND REPLACE THE DRIVE PCB

For these procedures you will need:

A #2 Phillips screwdriver

Remove

1. Remove the bottom cover.
2. Disconnect the cable from the transformer (see Figure 24, #1).
3. Remove the three screws from the drive PCB (see Figure 24, #2).
4. Lift out the drive PCB.

Replace

1. Place the drive PCB on the bottom cover so the screw holes line up.
2. Replace the three screws (see Figure 24, #2).
3. Connect the cable from the transformer (see Figure 24, #1).
4. Replace the bottom cover.
5. Perform the self test.

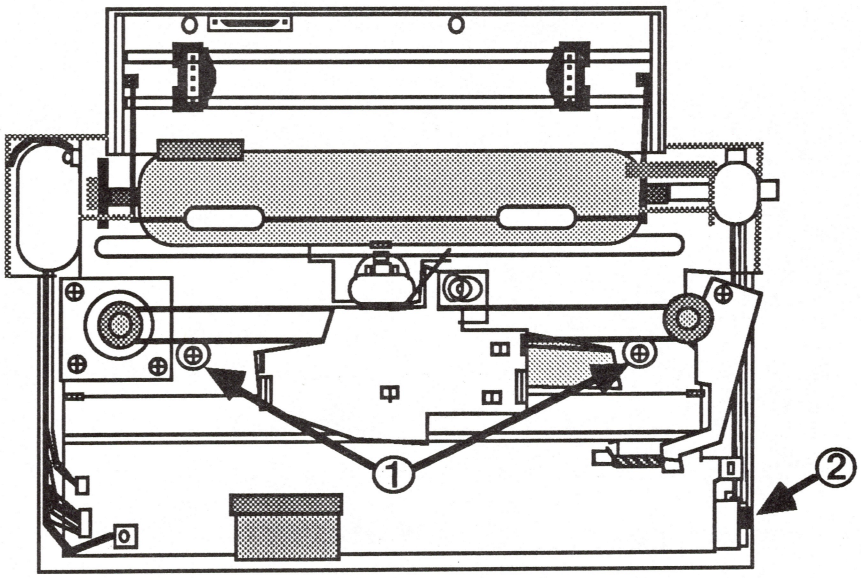

FIGURE 25

REMOVE AND REPLACE THE MECHANICAL ASSEMBLY

For these procedures you will need:

A #2 Phillips screwdriver, magnetized

NOTE: The mechanical assembly is not available as a replacement part.

Remove

1. Remove the paper cover.
2. Remove the tractor cover.
3. Remove the top cover.
4. Remove the print head.
5. Remove the logic board.
6. Remove the left and right legs.
7. Remove the bottom cover.
8. Remove the two screws shown in Figure 25, #1.
9. Lift the right side of the mechanical assembly and disconnect the two plug connectors (see Figure 25, #2).

   NOTE: On recent models of the printer, the plug connector is located in the right support leg. Be sure you connect the black and white cable from the noise filter PCB to the black and white cable from the operational panel. Failure to do this will cause all lights on the operational panel to remain lit.

10. Lift the entire mechanical assembly from the plastic case.

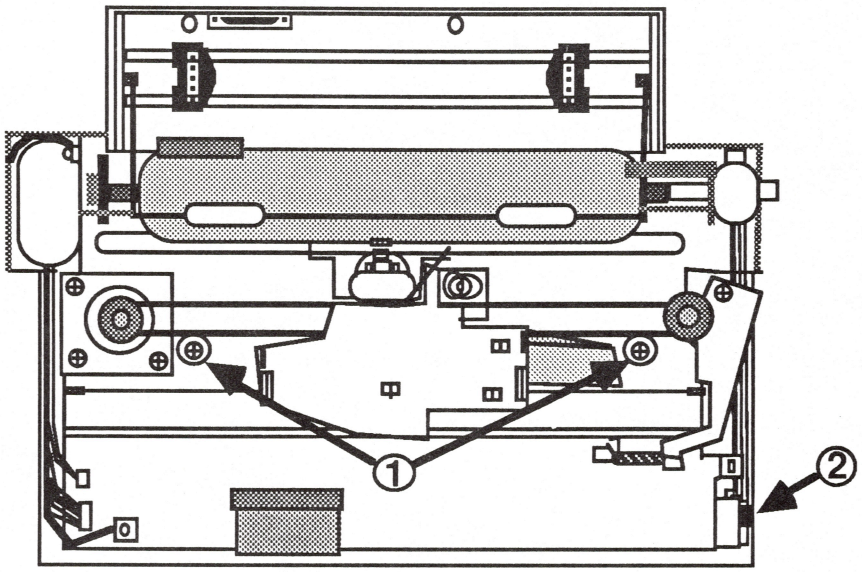

FIGURE 26

Replace

1. Tilt the mechanical assembly into the plastic case. Keep the right side lifted and connect the two plug connectors (see Figure 26, #2).

   NOTE: On recent models of the printer, the plug connector is located in the right support leg. Be sure you connect the black and white cable from the noise filter PCB to the black and white cable from the operational panel. Failure to do this will cause all lights on the operational panel to remain lit.

2. Check all cables for crimping and position and slide the mechanical assembly into the plastic case. Line up the screw holders.

3. Replace the two screws (see Figure 26, #1).

4. Replace the bottom cover.

5. Replace the left and right legs.

6. Replace the logic board.

7. Replace the top cover.

8. Replace the print head.

9. Replace the tractor cover.

10. Replace the paper cover.

11. Perform the self test.

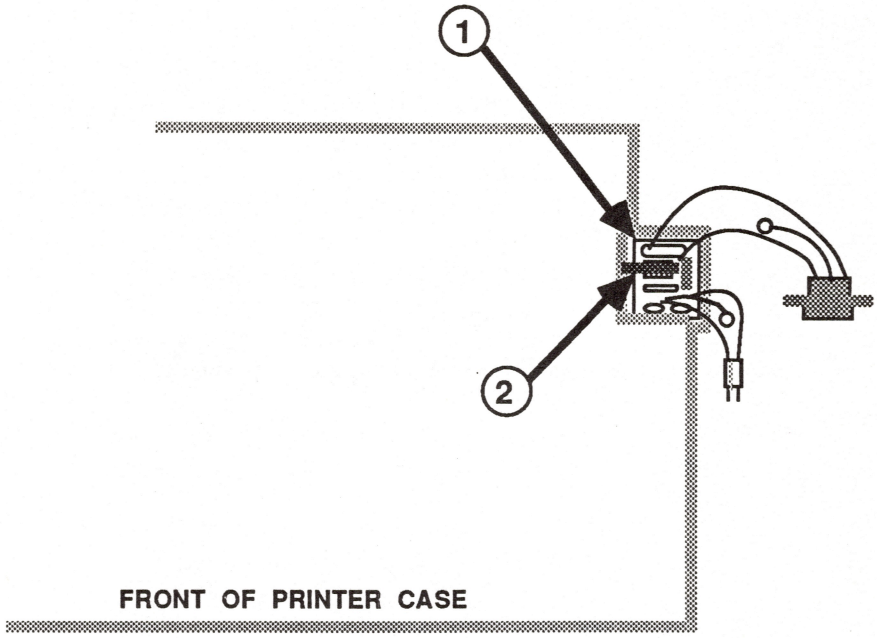

FIGURE 27

TOP VIEW
INTO RIGHT SUPPORT LEG

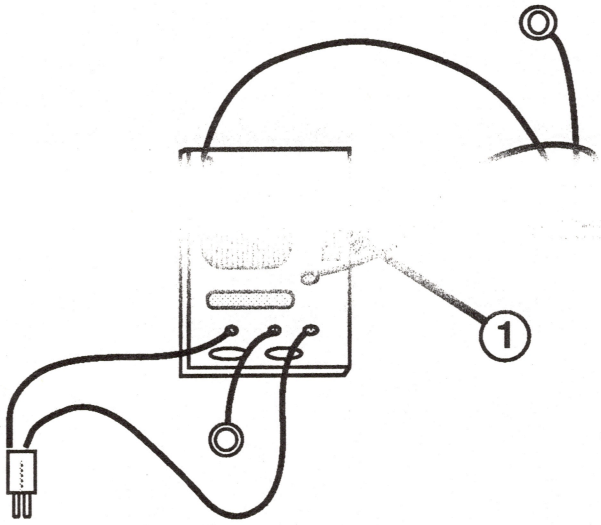

FIGURE 28

REMOVE AND REPLACE NOISE FILTER PCB ASSSEMBLY

Remove

1. Remove the mechanical assembly.

2. Locate the noise filter PCB in the right support leg (see Figure 27, #1).

3. Lift the tab (see Figure 27, #2) and lift out the noise filter PCB assembly (see Figure 28).

4. Check the fuse on the noise filter PCB (see Figure 28, #1) with a multimeter. Refer to **Section 2, Troubleshooting**, for more information.

Replace

1. Lift the tab (see Figure 27, #2) and slide the noise filter PCB assembly into place.

2. Replace the mechanical assembly.

3. Perform the self test.

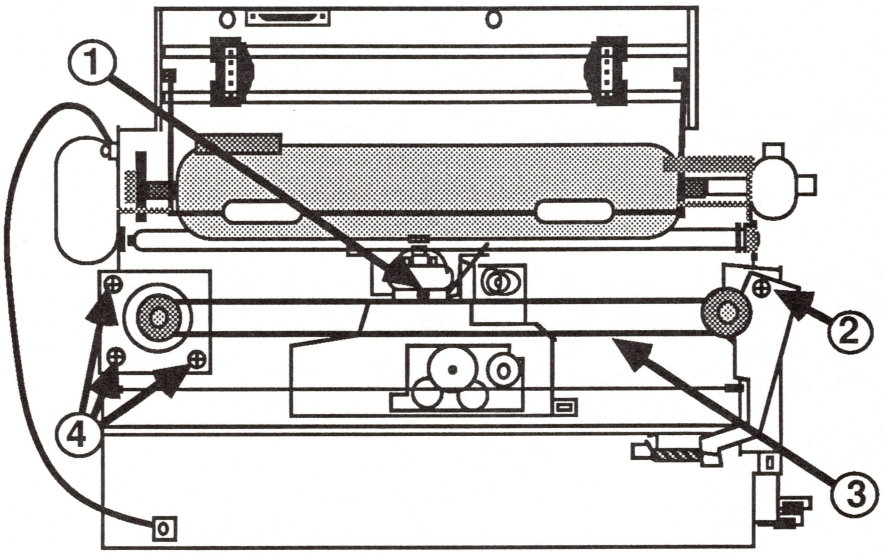

FIGURE 29

REMOVE AND REPLACE CARRIER MOTOR AND CARRIER BELT

For these procedures you will need:

A #2 Phillips screwdriver

Remove

1. Remove the mechanical assembly.
2. Remove the ribbon plate (removal of the entire ribbon wire assembly is not necessary).
3. Remove the screw that holds the black plastic carrier belt guide (see Figure 29, #1). If the guide is not glued to the belt, pry the guide off the assembly and set it aside.
4. Loosen the carrier belt adjustment screw (see Figure 29, #2).
5. Gently push in on the metal plate that the screw is located on and remove the drive belt from the right carrier motor pulley. Lift the carrier belt from the machine (see Figure 29, #3).
6. Disconnect the three screws holding the carrier motor in place (see Figure 29, #4). The motor will drop out.

Replace

1. Position the carrier motor with the connector and wires towards the rear of the machine and replace the three screws (see Figure 29, #4).
2. Replace the carrier belt on the left pulley and position it (see Figure 29, #3). Push in on the metal plate of the carrier adjustment (see Figure 29, #2) and replace the carrier belt on the right pulley.
3. Place the plastic carrier belt guide into position and replace the screw (see Figure 29, #1).
4. Tighten the carrier belt adjustment screw.
5. Replace the ribbon assembly.
6. Replace the mechanical assembly.
7. Perform the self test.

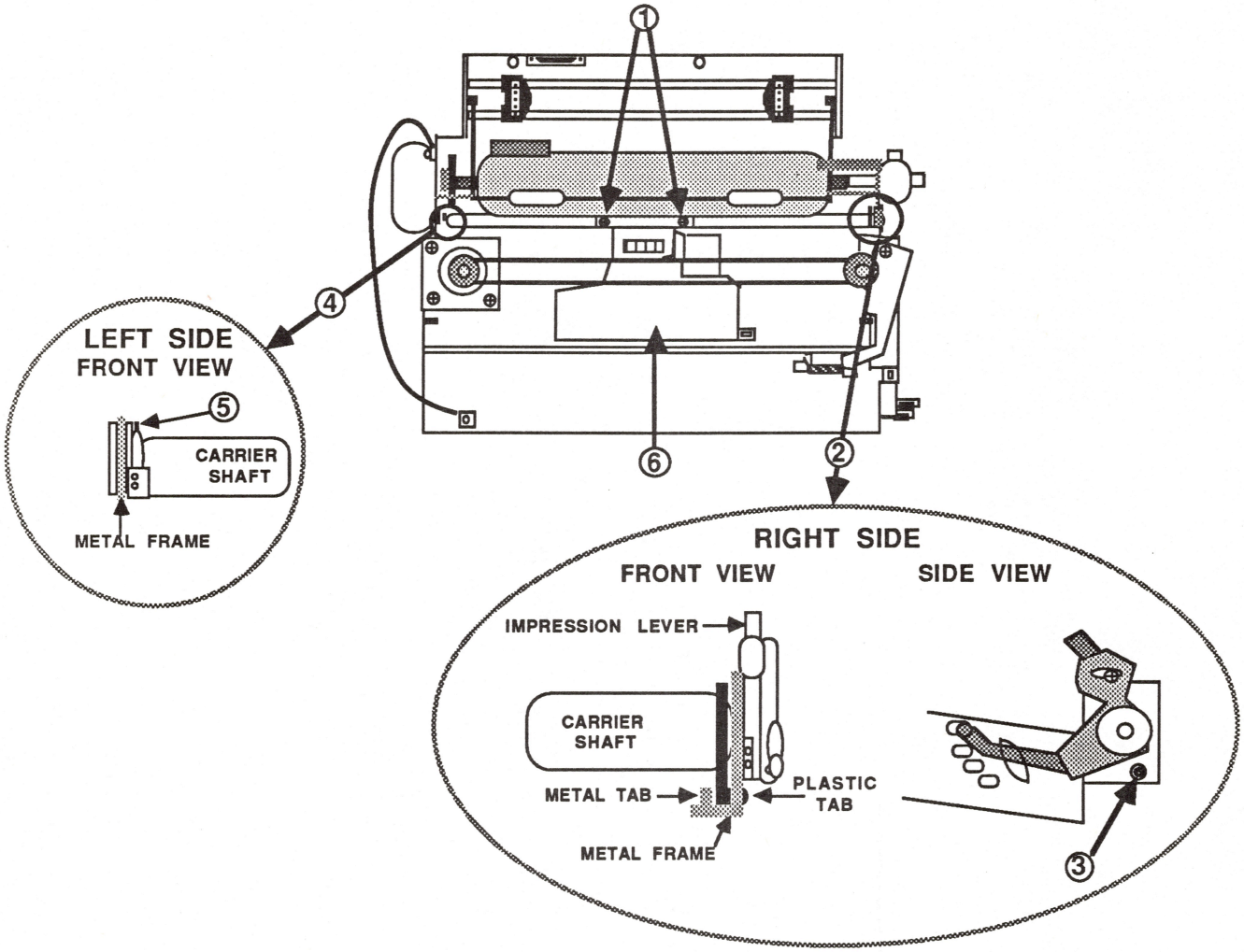
1
LEFT SIDE
FRONT VIEW
4
5
CARRIER
SHAFT
METAL FRAME
6
2
RIGHT SIDE
FRONT VIEW
SIDE VIEW
IMPRESSION LEVER
CARRIER
SHAFT
METAL TAB
PLASTIC
TAB
METAL FRAME
3

FIGURE 30

REMOVE AND REPLACE CARRIER BLOCK ASSEMBLY AND PRINT HEAD PCB

For these procedures you will need:

A #2 Phillips screwdriver
A jeweler's flathead screwdriver

Remove

1. Remove the mechanical assembly.
2. Remove the ribbon wire and ribbon assembly.
3. Remove the color ribbon assembly.
4. Remove the ribbon motor assembly.
5. Remove the carrier drive belt.
6. Remove the two screws holding the clear plastic paper guide (see Figure 30, #1).
7. Look at Figure 30, #2, for the connection of the right side of the carrier shaft to the frame. Pry forward the metal tab which is part of the frame.
8. Gently insert a jeweler's flathead screwdriver into the hole in the frame containing the tab (see Figure 30, #3). Gently push the tab backwards and lift the right side of the carrier shaft free.
9. Look at Figure 30, #4, for the connection of the left side of the carrier shaft to the frame.
10. Gently push back the metal tab shown in Figure 30, #5, and slide the carrier shaft to the right until it is free.
11. Pull the back of the carrier assembly (see Figure 30, #6) towards the front of the machine to release the tabs holding the assembly in position and lift up the carrier assembly and the carrier shaft.
12. Remove the carrier cam (shaped like a washer) from the left side of the carrier shaft.

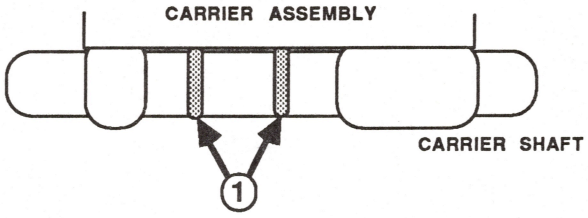

FIGURE 31

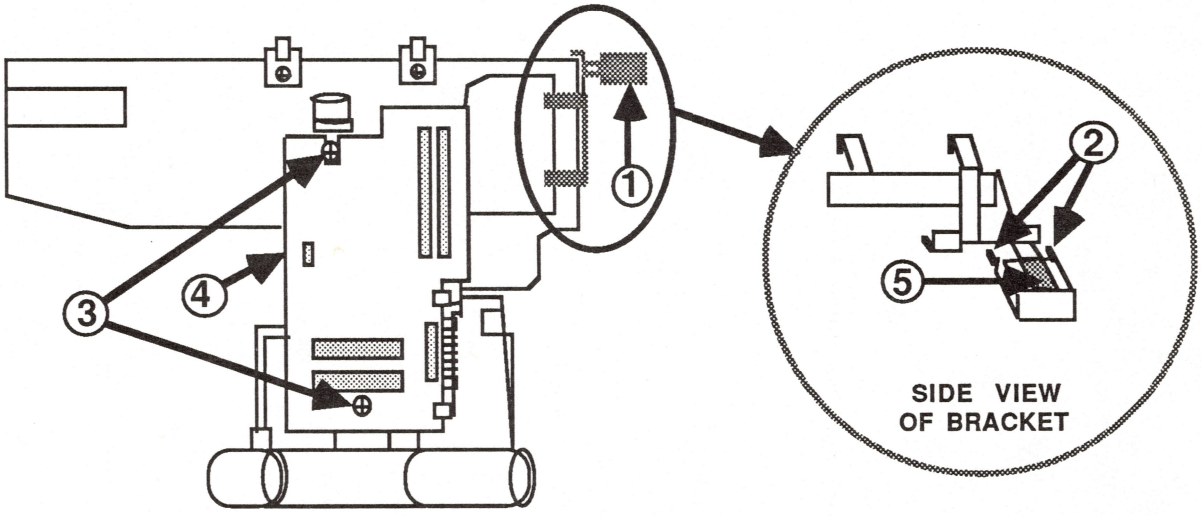

FIGURE 32

13. Turn the carrier assembly and the carrier shaft over. Slide the carrier shaft free of the carrier assembly. There are two felt wipers (for lubrication purposes) located where the carrier shaft slides through the carrier assembly. Remove them (see Figure 31, #1).

14. Locate the black plastic clamp on the carrier assembly holding the small connector in place (see Figure 32, #1). Pry the two tabs (see Figure 32, #2) loose and gently pull the clamp off and up.

15. Remove the two screws holding the print head PCB in place (see Figure 32, #3).

16. Gently lift the side of the board (see Figure 32, #4), slide it out from the tabs and remove it from the carrier assmbly.

17. Slide the small three pin connector mounted on the carrier assembly out (see Figure 32, #5 for location of connector).

Replace

1. Slide the small three pin connector, which is wired to the print head PCB, onto the mount provided on the carrier assembly (see Figure 32, #5 for location).

2. Position the print head PCB onto the carrier assembly.

3. Replace the two screws (see Figure 32, #3).

4. Position the bracket as shown in Figure 32, #1, and snap it into place.

5. Slide the carrier shaft through one end of the carrier assembly, replace the two felt wipers (for lubrication purposes), and slide the carrier shaft through the other side of the carrier assembly (see Figure 31, #1).

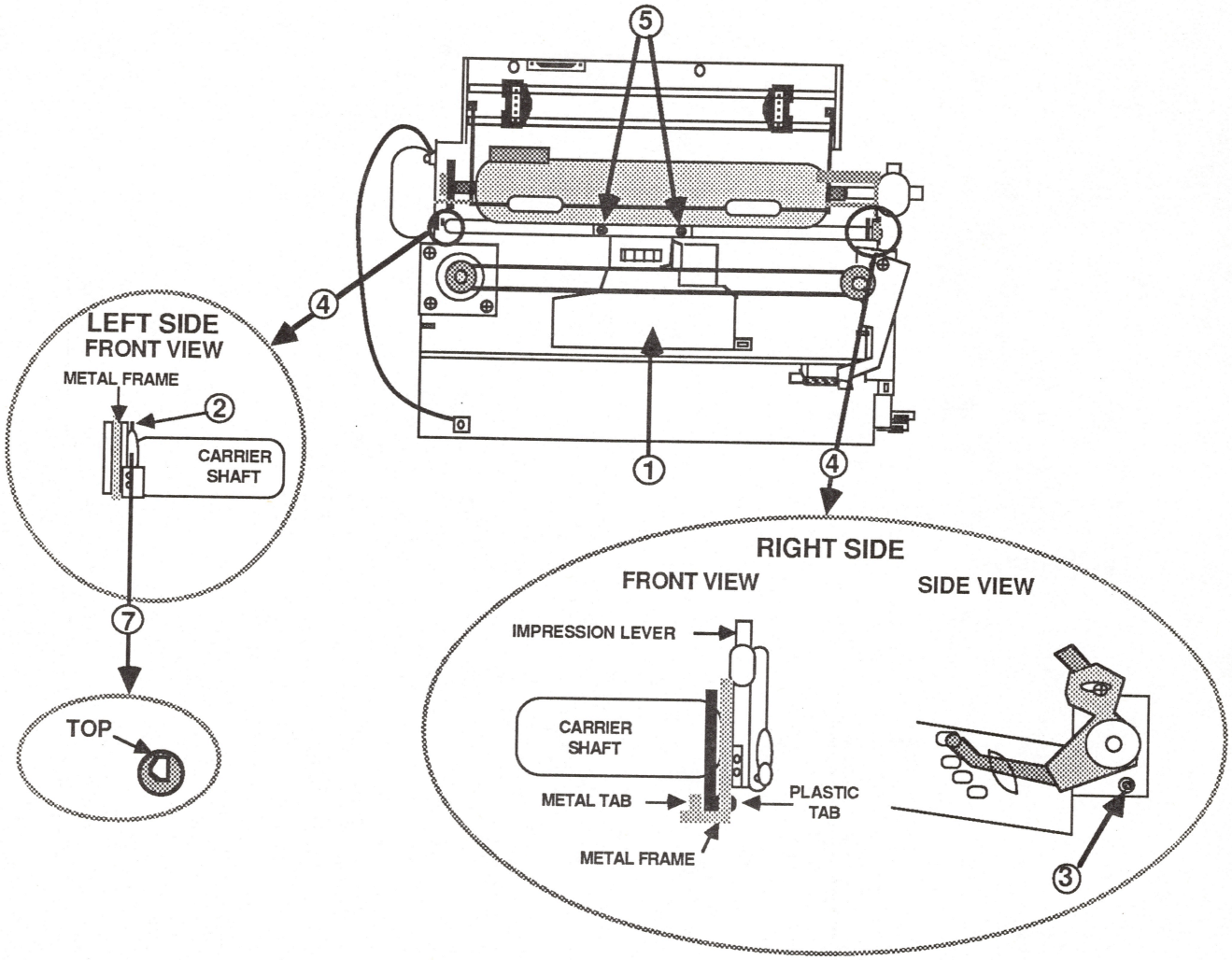
5
4
LEFT SIDE
FRONT VIEW
METAL FRAME
2
CARRIER
SHAFT
7
TOP
1
4
RIGHT SIDE
FRONT VIEW
SIDE VIEW
IMPRESSION LEVER
CARRIER
SHAFT
METAL TAB
PLASTIC
TAB
METAL FRAME
3

FIGURE 33

6. Place the carrier cam onto the left side of the carrier shaft.

   NOTE: Be sure to position it as shown in Figure 33, #7, with the smaller section as the top of the cam. Failure to do so will result in uneven printing intensity.

7. Position the carrier assembly so the tabs underneath the assembly (see Figure 33, #1) are in place.

8. Push back the tab (see Figure 33, #2) and slide the left side of the carrier shaft into place while making sure the right side is lined up.

9. Slide the right side of the carrier shaft into position, making sure that the tab is in the hole in the metal frame, and that the impression lever is in position (see Figure 33, #3).

10. Push the metal tab back towards the rear of the machine (see Figure 33, #4).

11. Verify that the impression lever is pushed forward all the way. Position the clear plastic paper guide (refer to **Section 4, Adjustments**) and replace the two screws (see Figure 33, #5).

12. Replace the carrier drive belt.

13. Replace the ribbon motor assembly.

14. Replace the color ribbon assembly.

15. Replace the ribbon wire and ribbon assembly.

16. Replace the mechanical assembly.

17. Perform the self test.

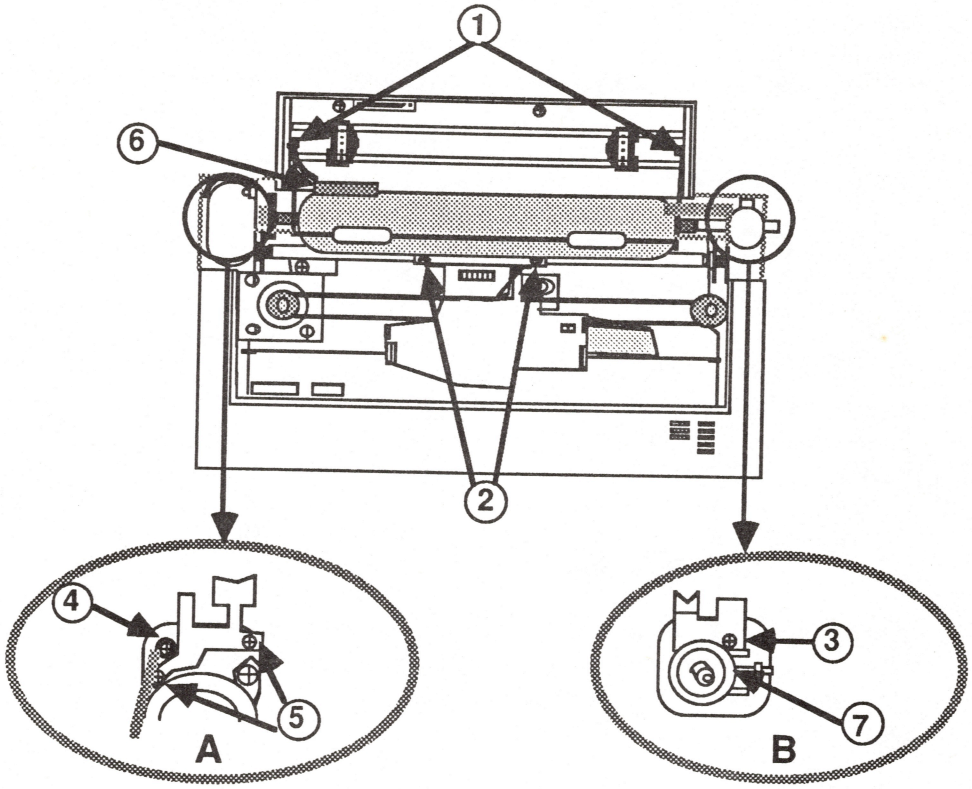

FIGURE 34

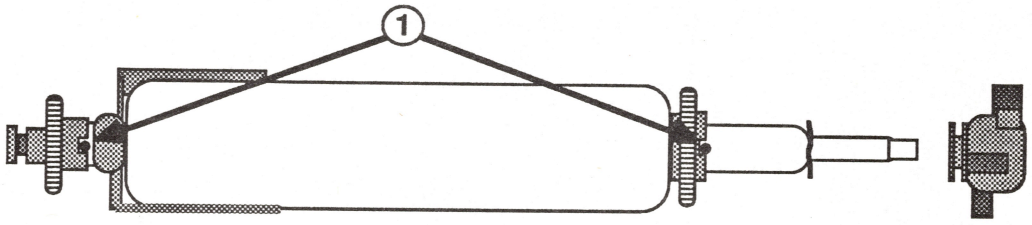

FIGURE 35

REMOVE AND REPLACE PLATEN AND PLATEN ASSEMBLY

For these procedures you will need:

Pin punch (1/16 inch)
Soldering iron, solder sucker, and solder

Remove

1. Remove the tractor cover.
2. Remove the top cover.
3. Remove the print head.
4. Remove left and right support legs.
5. Remove the paper bail assembly (see Figure 34, #1).
6. Remove the two screws that hold the paper guide in place (see Figure 34, #2). Lift the paper guide out of the machine.
7. Remove the screw from the right side of the printer that holds the metal plate in place (see Figure 34, Detail B, #3). Set the metal plate and screw aside.
8. Remove the screw from the left side (see Figure 34, Detail A, #4). This screw holds a grounding strap in place.
9. Remove the two screws from the left side that holds the metal plate in place (see Figure 34, Detail A, #5). Set the metal plate and two screws aside.
10. Locate the small metal plate attached to the platen (see Figure 34, #6). The plate has a small black grounding wire soldered to it. Unsolder the wire.
11. Lift the platen left side first from the machine, and slide the shaft free from the right side.
12. On the right side of the machine are two plastic pieces, the platen bushing and the free lever, which the platen shaft slides into (see Figure 34, Detail B, #7). Use a flathead screwdriver to gently snap the outer piece free. Remove both pieces.
13. Locate the two pins on the platen (see Figure 35, #1).
14. Using a pin punch, remove both pins. Then remove all the black plastic pieces from the platen.

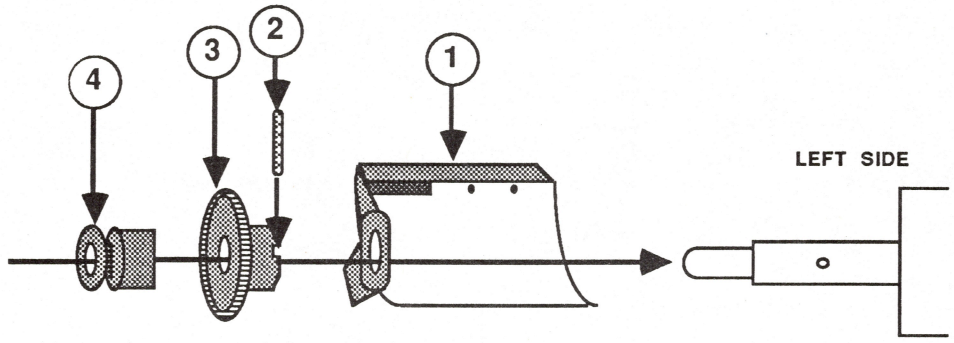

FIGURE 36

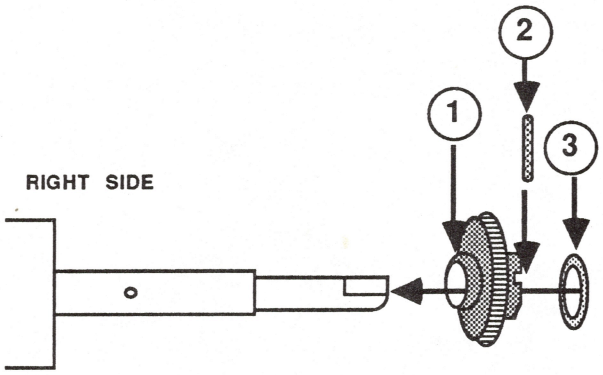

FIGURE 37

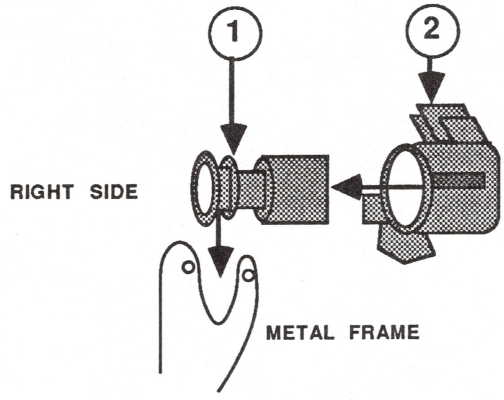

FIGURE 38

Replace

1. Assemble the left side of the platen (see Figure 36). Slide the paper empty frame (see Figure 36, #1) into position and insert the pin (see Figure 36, #2). Slide the platen gear and then the platen bushing into position (see Figure 36, #3 and #4).

2. Assemble the right side of the platen (see Figure 37). Slide the drive gear (see Figure 37, #1) into position and insert the pin (see Figure 37, #2). Slide the platen spring into position (see Figure 37, #3).

3. Position the platen bushing (see Figure 38, #1) into the frame on the right side of the printer. Slide the free lever (see Figure 38, #2) onto the bushing.

4. Slide the right side of the platen shaft into the bushing and free lever (see Figure 39, #1). Line up the tab on the paper empty frame with the notch in the plastic frame (see Figure 39, #2). Drop the left side into place (see Figure 39, #3).

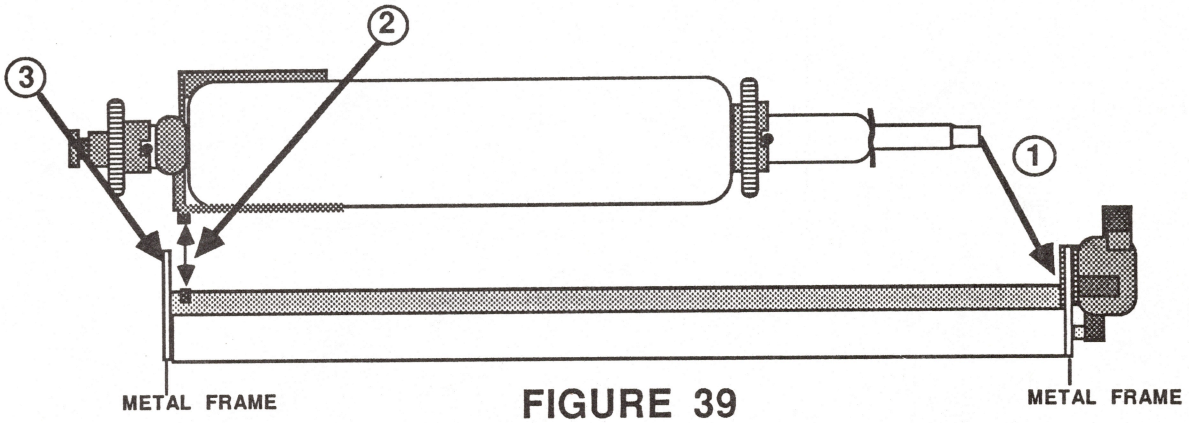

FIGURE 39

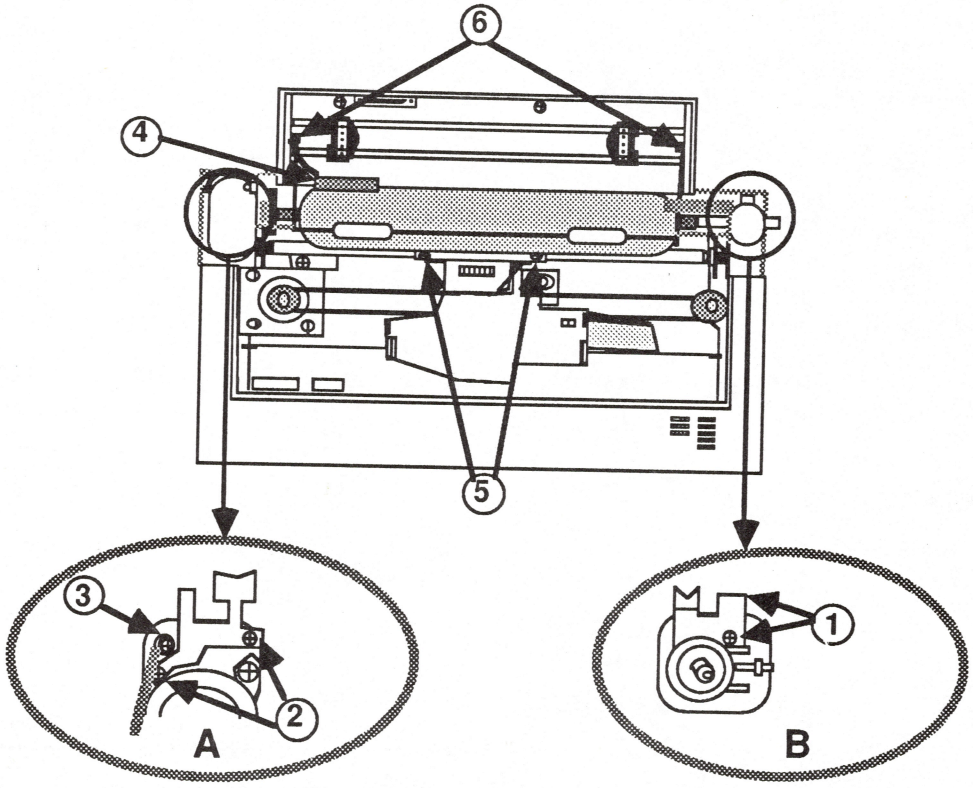

FIGURE 40

5. Position the metal plate on the right side of the platen and replace the screw that holds it (see Figure 40, Detail B, #1).

6. Position the metal plate on the left side of the platen and replace the two screws that hold it (see Figure 40, Detail A, #2).

7. Position the grounding strap and replace the screw that holds it (see Figure 40, Detail A, #3).

8. Locate the small black grounding wire. Solder the wire to the metal plate on the paper empty frame (see Figure 40, #4).

9. Position the paper guide and replace the two screws that hold it (see Figure 40, #5).

10. Replace the paper bail assembly (see Figure 40, #6).

11. Replace the left and right support legs.

12. Replace the print head.

13. Replace the top cover.

14. Replace the tractor cover.

15. Perform the self-test.

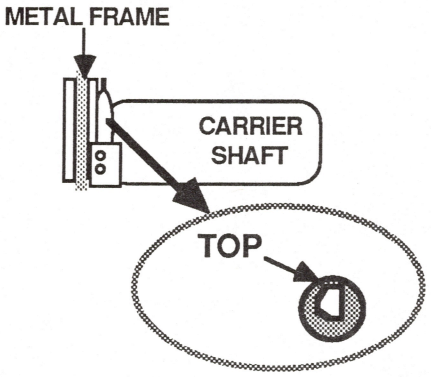

FIGURE 41A

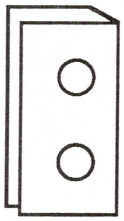

FIGURE 41B

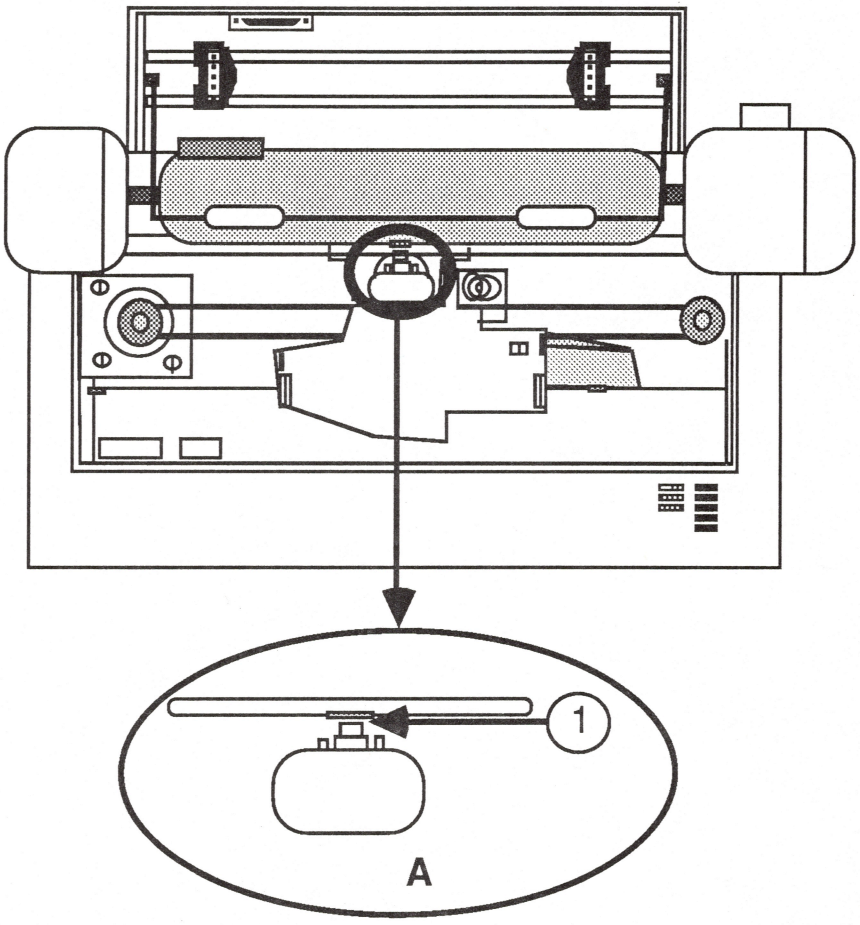

FIGURE 42

REMOVE AND INSTALL SHIMS

IMPORTANT: BEFORE PERFORMING THIS PROCEDURE CHECK THE CAM WASHER ON THE LEFT SIDE OF THE CARRIER SHAFT TO BE SURE IT IS IN POSITION (SEE FIGURE 41A). THE SMALLER DIAMETER SHOULD BE IN THE TOP POSITION WHEN POSITIONING IT ONTO THE CARRIER SHAFT. REFER TO "REMOVE CARRIER BLOCK ASSEMBLY AND PRINT HEAD PCB" FOR THESE PROCEDURES.

NOTE: A shim is a small 3-sided metal piece with two holes on one side (see Figure 41A). The shim is used to correct the distance between the print head and the platen.

For these procedures you will need:

Shims (.002 inches, .004 inches, and .008 inches)
Feeler gauge
Phillips screwdriver
Small needlenose pliers

Check the Gap

1. Remove the paper cover and ribbon cartridge.

2. Gently pull the impression lever up, so that the dot head is in the closest position.

NOTE: The recommended gap for the following readings should be approximately .013 inches plus or minus .002 inches (0.33 mm).

3. Push the carrier assembly to the far right.

4. Using a feeler gauge, measure the gap between the front of the printhead and the metal shield on the paper guide (see Figure 42, Detail A, #1). Record it.

5. Push the carrier assembly to the far left.

6. Using a feeler gauge measure the gap between the front of the printhead and the metal shield on the paper guide. Record it.

7. Subtract the right side gap (measured in step 4) from the left side gap (measured in step 6).

   If the difference is a negative number, go to **Remove Shim.**

   If the difference is a positive number, go to **Install Shim.**

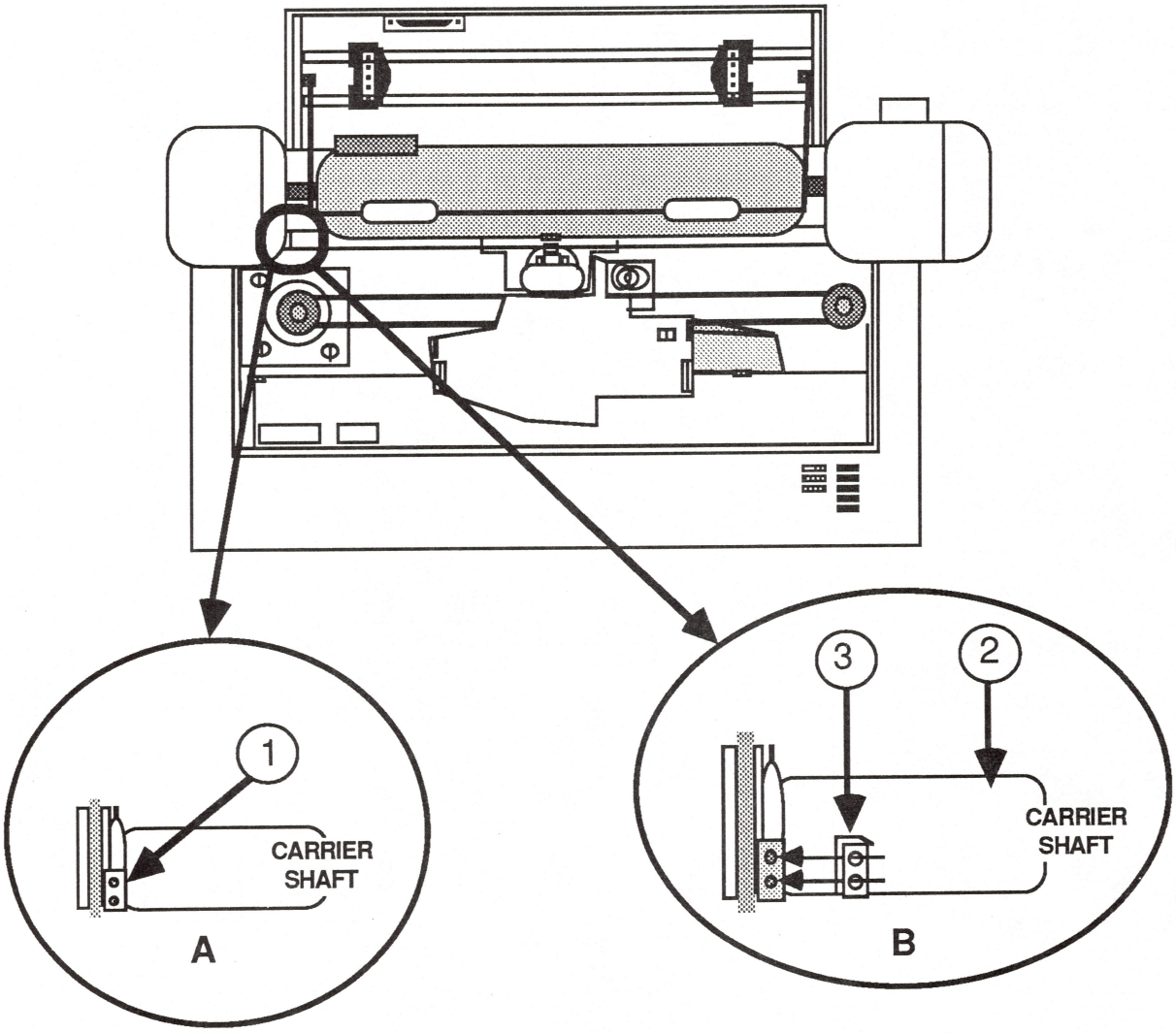

FIGURE 43

Remove Shim

1. Look at the left side of the carrier bar (see Figure 43, Detail A, #1).

   If there is a shim installed, remove it with needlenose pliers.

   If there is no shim installed, be sure the cam washer on the left side is positioned correctly.

2. Verify that the gap is now correct.

3. Go to **Final Testing.**

Install Shim

1. Select a shim whose thickness is closest to the difference calculated.

   a. .002 inches (0.05 mm)
   b. .004 inches (0.1 mm)
   c. .008 inches (0.2 mm)

2. Push the carrier bar towards the rear of the machine (see Figure 43, Detail B, #2) and, using needlenose pliers, install the shim on the left side of the carrier bar, first inserting the two protruding tabs into the holes on the shim (see Figure 43, Detail B, #3). Slide the shim into position. Release the carrier bar.

3. Verify that the gap is now correct.

4. Go to **Final Testing.**

Final Testing

1. Replace the ribbon cartridge and the paper cover.

2. Perform the self-test.

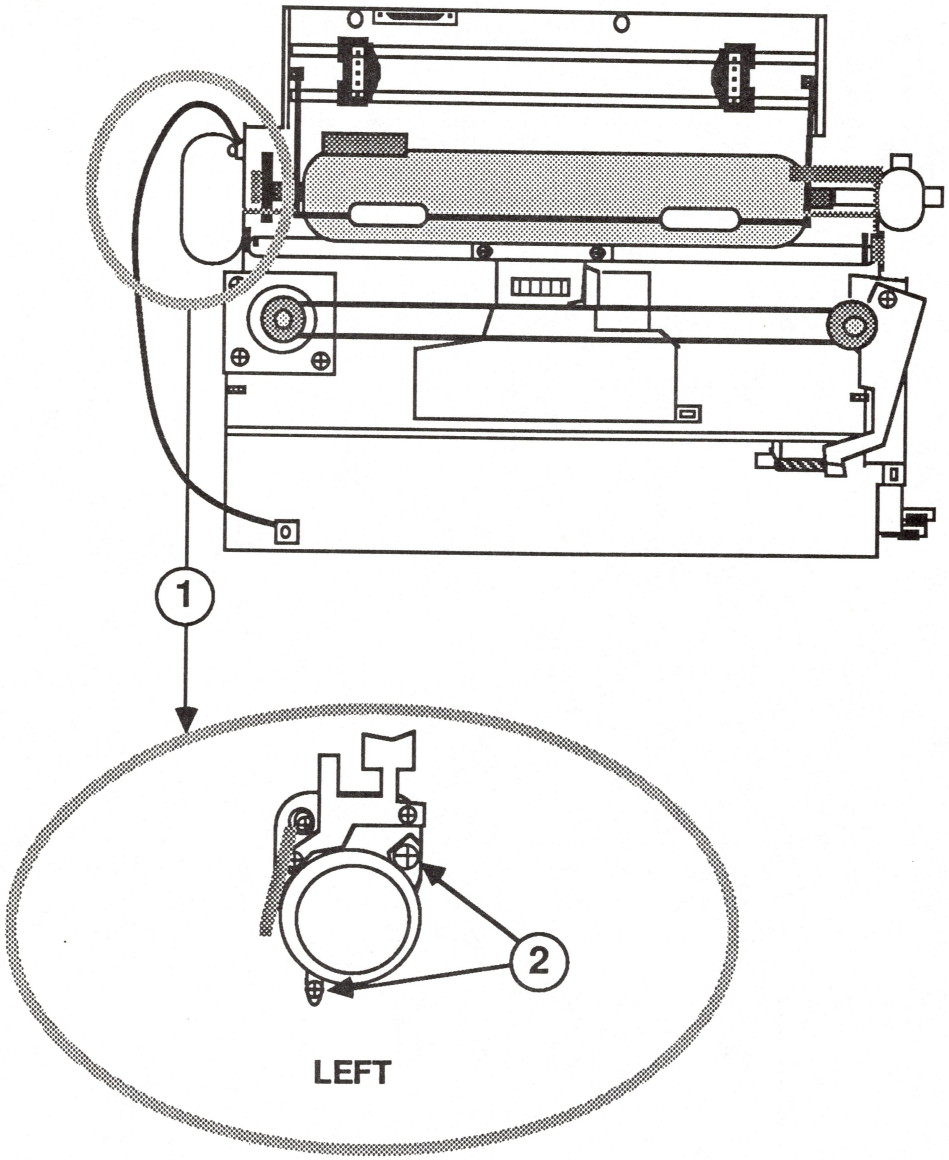

FIGURE 44

REMOVE AND REPLACE THE PAPER FEED MOTOR

For these procedures you will need:

A #2 Phillips screwdriver, magnetized

NOTE: It is not necessary to remove the logic board from the mechanical assembly for this procedure.

Remove

1. Remove the mechanical assembly.
2. Locate the paper feed motor (see Figure 44, #1).
3. Remove the two screws that hold the motor in place (see Figure 44, #2).
4. Gently pull the motor off the mechanical assembly.

Replace

1. Position the paper feed motor and slide it onto the mechanical assembly.
2. Replace the two screws that hold the motor in place (see Figure 44, #2).
3. Replace the mechanical assembly.

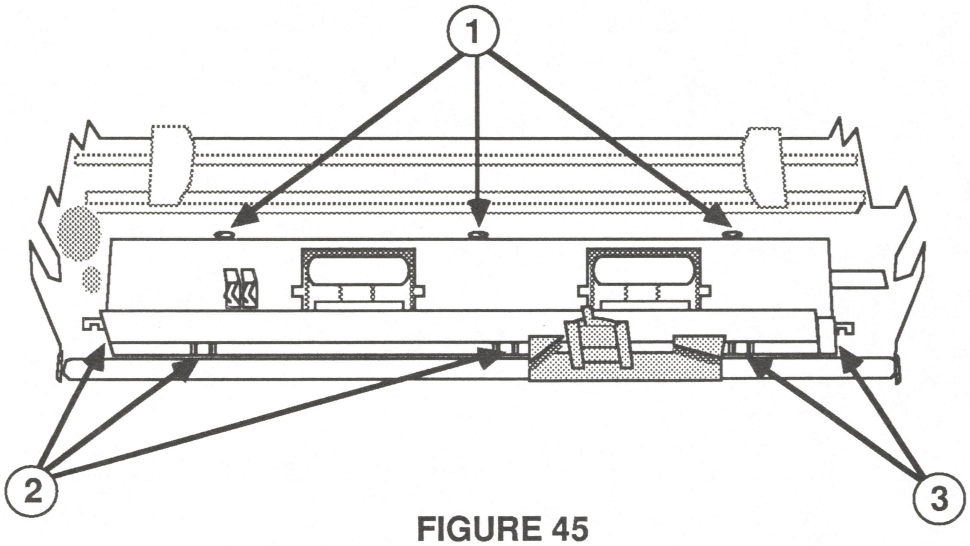

FIGURE 45

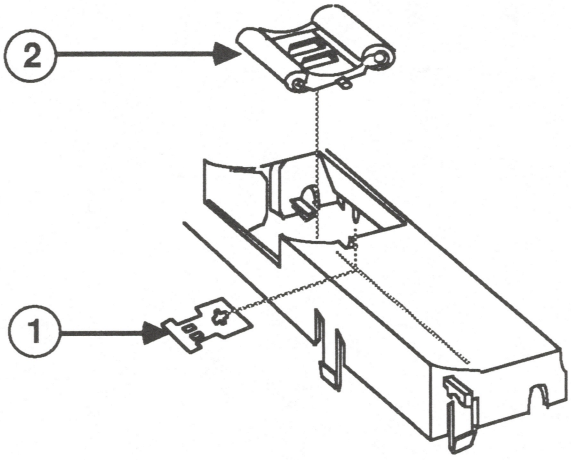

FIGURE 46

REMOVE AND REPLACE THE PAPER GUIDE

Remove

1. Remove the mechanical assembly.
2. Remove the platen and platen assembly.
3. Remove the three screws that hold the paper guide in place (Figure 45, #1).
4. Push the carrier to the left; then gently unhook each of the three tabs (Figure 45, #2) using a small flatblade screwdriver.
5. Push the carrier to the right; then gently unhook each of the remaining two tabs (Figure 45, #3) using a small flatblade screwdriver.
6. Lift the paper guide off.
7. Lift the two pinch rollers and pinch-roller spring plates off the paper guide and set them aside.

Replace

1. Position the two pinch-roller spring plates (Figure 46, #2) on the paper guide.
2. Position the paper guide so the tabs line up. Gently press the paper guide into position.
3. Place the pinch rollers on the paper guide and replace the three screws (Figure 45, #1).
4. Replace the platen and the platen assembly.
5. Replace the mechanical assembly.

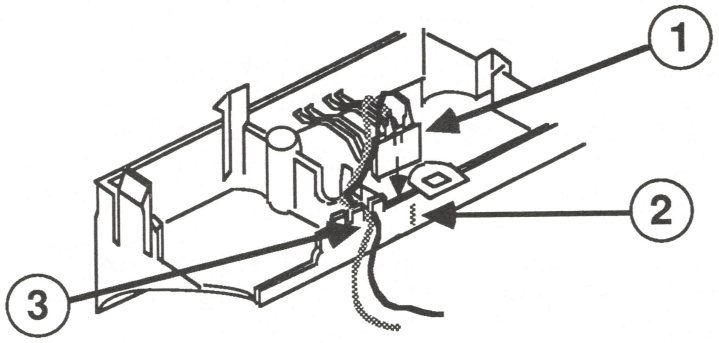

FIGURE 47

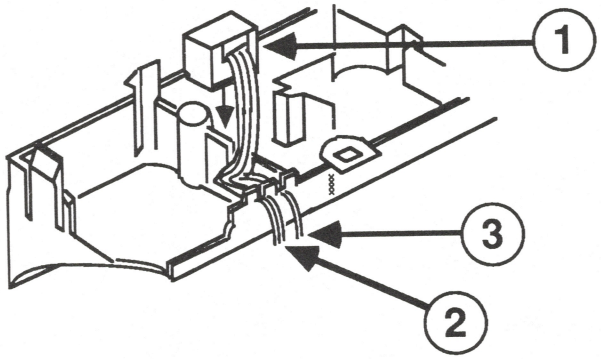

FIGURE 48

REMOVE AND REPLACE THE PAPER SENSOR

There are two paper sensors: one is a mechanical paper sensor (Figure 47, #1) and one is a optical paper sensor (Figure 48, #1). For information on the compatibility of these sensors with the logic boards, refer to Section 0, Service Notes.

Remove

1. Remove the paper guide. Pay special attention to how the sensor wires are routed to the front of the machine.

2. Turn the paper guide upside down and use a small jeweler's flatblade screwdriver to release the tab that holds the sensor in place (Figure 47, #2). This procedure is the same for both sensors.

3. Gently pull the sensor up and free it from the paper guide.

Replace

1. Install the paper sensor by sliding it into the notches until the tab clicks into place.

2. For the mechanical paper sensor, route the wires as shown in Figure 47, #3.

   For the optical paper sensor, route the black and yellow wire as shown in Figure 48, #2, and route the single wire as shown in Figure 48, #3.

3. Replace the paper guide.

ImageWriter II Technical Procedures

Section 4

Adjustments

Contents:

If the adjustments do not fix the problem the printer is displaying, turn to **Section 2, Troubleshooting.**

APPLE II PERIPHERALS DISKETTE

The Apple II Peripherals Diskette will perform the following tests: Character Set, Alternate Sets, Custom Character, Graphic Images, Margins/Tabs, Registration (Firing Hammer), and Color Test.

The two tests which are used for adjustment purposes are the Registration (Firing Hammer) and the Color Test. If you do not have the diskette, use the procedures in this section to make the necessary adjustments.

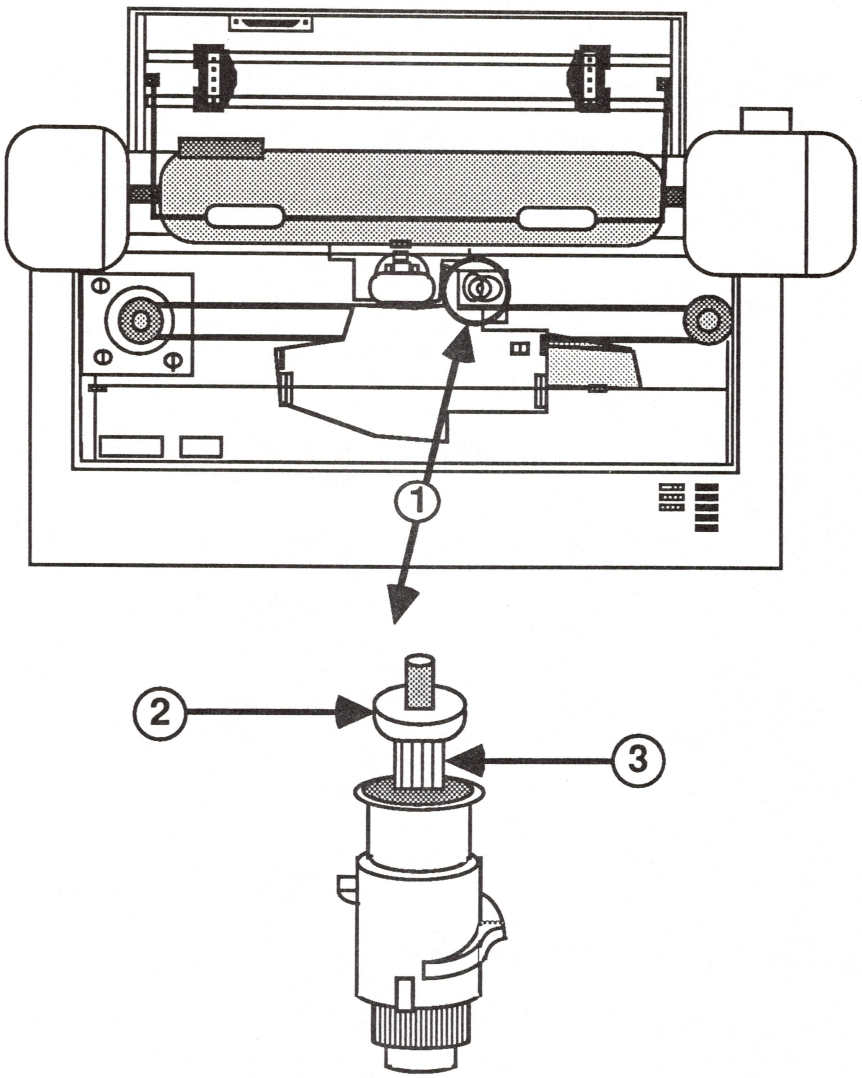

FIGURE 1

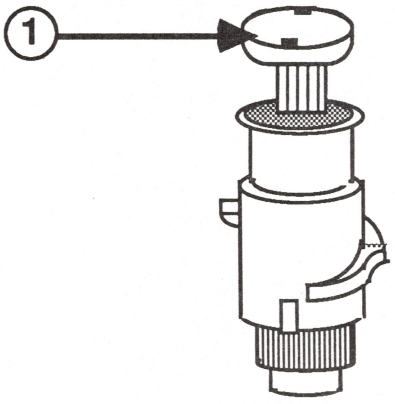

FIGURE 1a

RIBBON ADJUSTMENT

NOTE: If you have an ImageWriter II with a serial number of 244451 or above, you will have the color ribbon assembly shown in Figure 1a. Refer to the **ImageWriter II Owner's Manual** for instructions on adjusting that model of the assembly. The following instructions refer to the color ribbon assembly shown in Figure 1.

This adjustment should be performed if:

a. the color print function fails
b. the color ribbon assembly has been replaced
c. dots are missing on printout with black ribbon

1. Run the self test. Examine the colors printed. The colors should be: black, yellow, red, blue, orange, green, and purple, with no overlapping. The self test should produce one line of each color and then repeat the same sequence of colors until stopped.

   If it doesn't, or if the colors overlap, continue with this procedure.

2. Power off the printer and remove the paper cover.

3. Locate the color ribbon assembly (see Figure 1, #1).

4. Loosen the lock nut (see Figure 1, #2) and turn the adjustment nut (see Figure 1, #3) half a turn. To determine which way to turn the adjustment nut, examine the self test printout. The first lines of the self test should be black.

   a. If the bottom half of the letters is missing in the first (black) line, turn the adjustment nut clockwise.

   b. If the first line is printed with the letters blue (or half blue), turn the adjustment nut counterclockwise.

5. Tighten the lock nut. Run the self test and examine the printout. Repeat step 4 if the self test is overlapping. This may need to be repeated several times.

6. When the colors are printed correctly with no overlapping, the adjustment is complete.

NOTE: If top dots are missing on printout and the ribbon is black, turn the lock nut clockwise and retest the printer.

FIRING HAMMER

The firing hammer adjustment **SHOULD ONLY BE DONE** when the carrier belt, carrier shaft, carrier motor or PC board is replaced.

1. Connect the printer to a computer.

2. Power on the printer and the computer.

3. Print a few lines of the capital letter "H".

   Check the printed letters for any misalignment. See Figure 2, below for example.

FIGURE 2

4. If the letters are misaligned, remove the carrier cover and change the settings of DIP switches 2-5 and 2-6. Change only one switch at a time.

5. Perform step 3 again.

   Repeat this procedure until the lines of the capital letter "H" are aligned.

IMPRESSION LEVER

The impression lever is located under the carrier cover, to the extreme right (see **Section 3, Take-Apart** for more information). This lever moves the dot head away from or closer to the platen. Adjust the position of the lever if the print quality is too light or too dark.

CARRIER BELT ADJUSTMENT

The adjustment for the carrier belt is located under the carrier cover, to the right (see **Section 3, Take-Apart** for more information). This adjustment increases or decreases the amount of tension on the carrier belt.

PAPER GUIDE

The impression lever should be all the way forward to verify that the paper guide is adjusted correctly. The paper guide, when correctly positioned, will move approximately .0005" when pressed towards the platen at the center. Verify this by rolling two sheets of Xerox paper under the platen. The paper guide should then be snug with little or no movement towards the platen.

ImageWriter II Technical Procedures

Section 5

ImageWriter II SheetFeeder

Contents:

If you need to identify a part or its location, or to verify which exchange assembly it is included with, refer to Section 7, SheetFeeder Illustrated Parts List.

INTRODUCTION

The ImageWriter™ II SheetFeeder is a convenient way to use the ImageWriter II to print on stationery and letterhead as well as other common paper. For instructions on how to install, use, and care for the SheetFeeder, refer to the ImageWriter II SheetFeeder Installation Manual.

TOOLS REQUIRED

For the SheetFeeder take-apart procedures you will need:

medium Phillips screwdriver
small Phillips screwdriver
small flathead screwdriver
small pair of long needlenose pliers
set of jeweler's screwdrivers

THINGS TO REMEMBER

Check the following before you begin troubleshooting:

1. Make sure that the SheetFeeder is seated properly and that its edges align properly with the ImageWriter II.

2. Make sure the paper release lever is in the friction-feed position.

3. Make sure you pressed the button to release the back panel of the input tray, so that the paper is pressed against the feeder rollers.

TESTING THE SHEETFEEDER

After the SheetFeeder is installed:

1. Turn on the ImageWriter II and make sure the select light is off.

2. Press the form feed button. A single sheet of paper will load under the print mechanism of the ImageWriter II. The select light should now be on.

3. Power off the ImageWriter II.

4. Run the ImageWriter II self test (refer to **Section 1, Basics**).

TROUBLESHOOTING THE SHEETFEEDER

NOTE: Be sure to do all testing on a **known good** ImageWriter II.

The only problem that will be displayed by the SheetFeeder is no feeding or partial feeding of paper (the error light on the ImageWriter II will be on if the paper is not fed properly). To correct this problem, perform the following steps in the order given. Be sure to test the SheetFeeder after each step.

a. Clean the black rubber feed rollers mounted on the two roller shafts with a cotton swab dipped in alcohol.

b. Replace the PCB Assembly.

c. Replace the Frame Assembly.

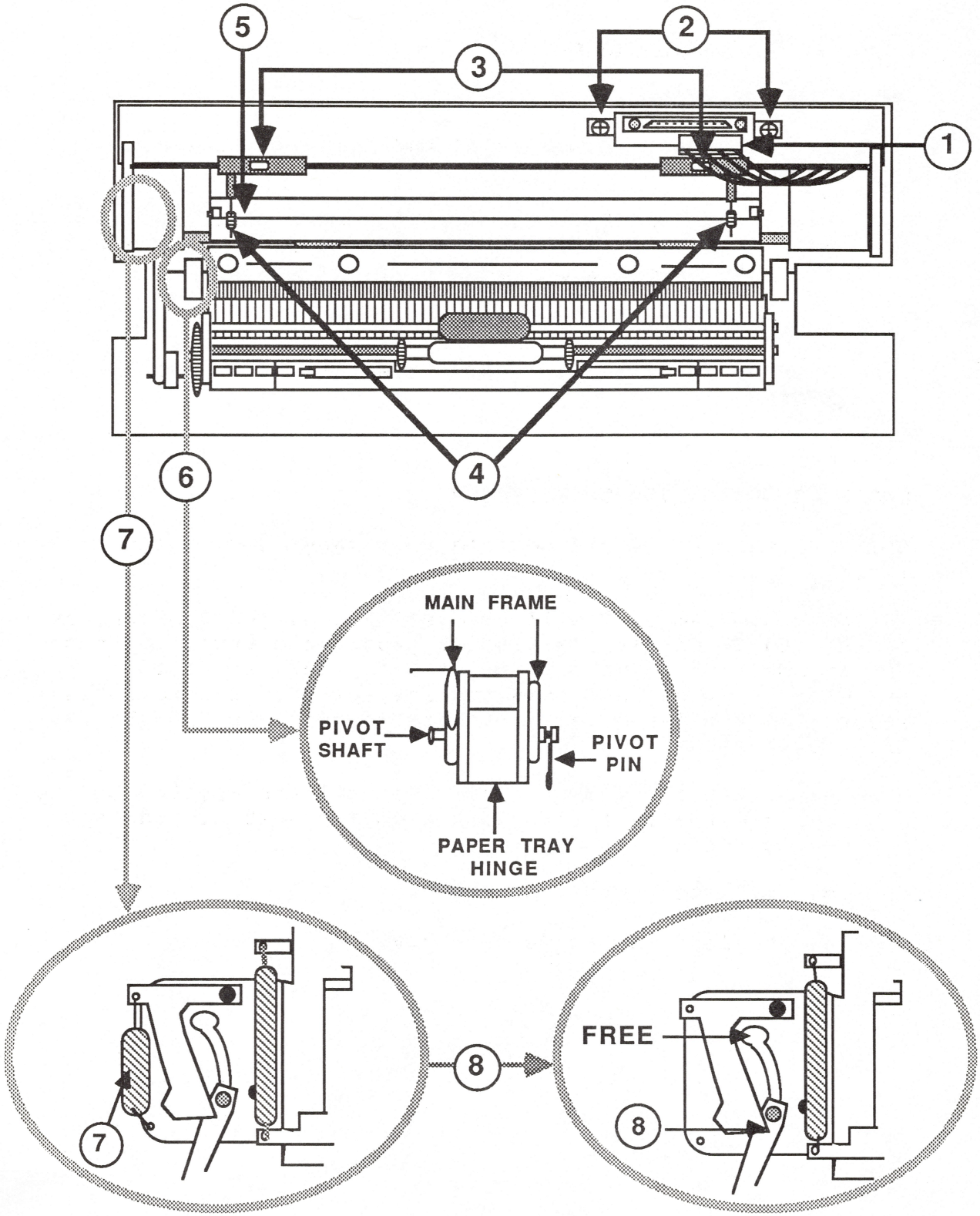
5
2
3
1
6
4
7
MAIN FRAME
PIVOT SHAFT
PIVOT PIN
PAPER TRAY HINGE
7
8
FREE
8

FIGURE 1

HOUSING AND PAPER TRAY

Separate

1. Unplug the connector (see Figure 1, #1).

2. Remove the two screws that hold the connector plate and mounting springs (see Figure 1, #2).

3. Remove the two screws from the metal clamps that hold the rear housing (see Figure 1, #3). Remove the rear housing.

4. Remove the paper guide springs (see Figure 1, #4).

5. Remove the paper guide (see Figure 1, #5).

6. Remove the two pivot pins. One is located on the left, and one on the right side of the SheetFeeder (see Figure 1, #6 [left side shown]).

7. Use a small flathead screwdriver to gently pry the two pivot shafts out. One is located on the left, and one on the right side of the SheetFeeder (see Figure 1, #6 [left side shown]).

8. Lift the plastic paper tray hinge loose from both sides (see Figure 1, #6). **Do not attempt to separate them until after the next step.**

9. Lay the SheetFeeder right side down. Locate and remove the spring on the left side of the SheetFeeder (see Figure 1, #7).

10. Locate the paper tray detent plate (see Figure 1, #8). Slide the plate up to free it from the frame. Gently pry the plate loose.

11. Separate the housing assembly and the paper tray assembly.

Connect

1. Position the paper tray onto the housing. Position the paper tray detent plate (see Figure 1, #8) into the circular opening in the frame opening. Slide the plate down into position.

2. Replace the spring on the left side of the SheetFeeder (see Figure 1, #7).

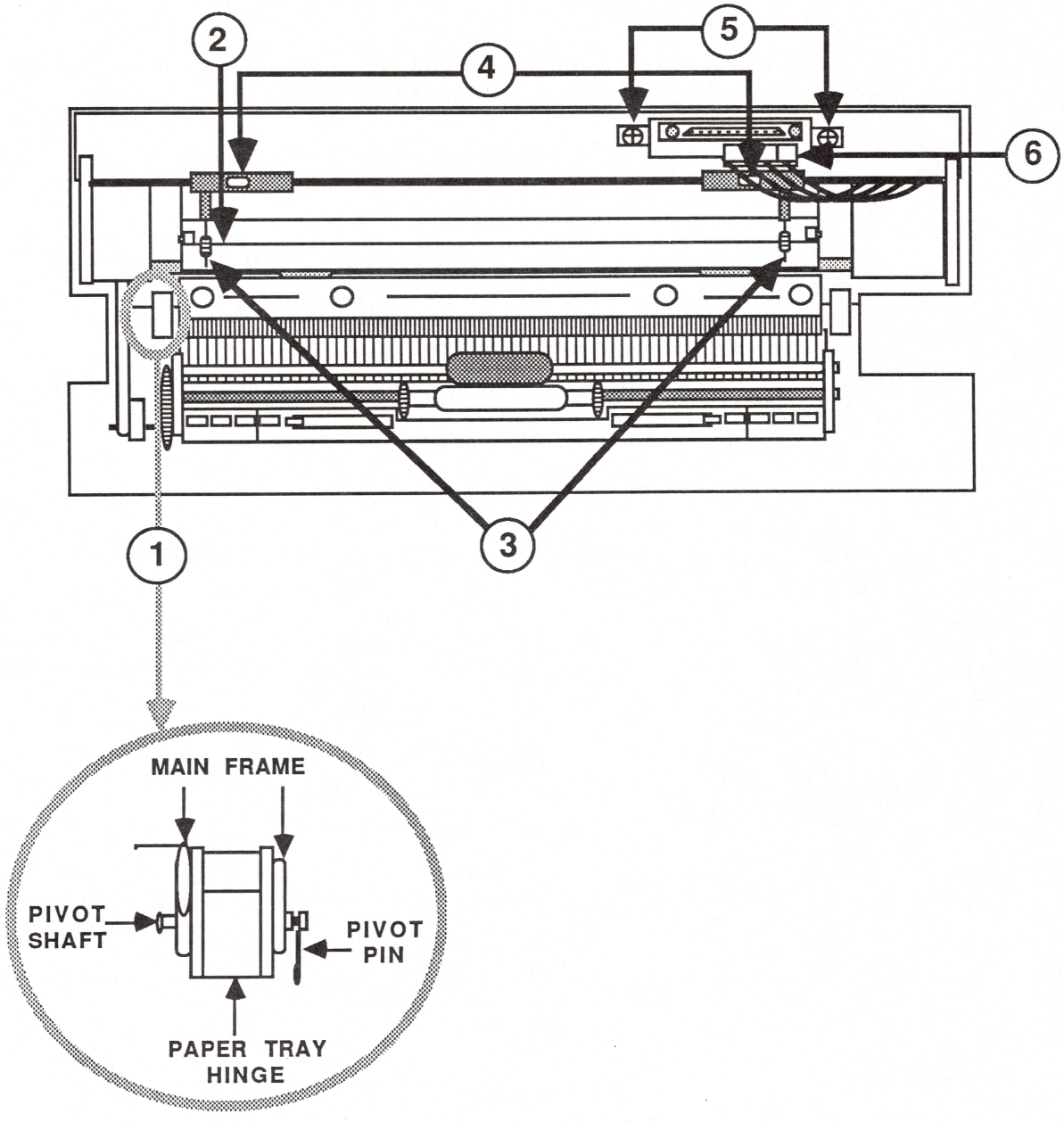

FIGURE 2

3. Line up the plastic hinges on both sides. Slide them into position (see Figure 2, #1).

4. Use a pair of long thin needlenose pliers and replace the pivot shaft on the left side (see Figure 2, #1). Slide the pivot pin onto the shaft (see Figure 2, #1). Repeat this step for the right side.

5. Replace the paper guide (see Figure 2, #2).

6. Replace the paper guide springs (see Figure 2, #3).

7. Position the rear housing and the metal clamps and replace the two screws (see Figure 2, #4). Be sure the connector cable is in position.

8. Position the connector plate with the two springs underneath and replace the two screws (see Figure 2, #5).

9. Plug in the connector (see Figure 2, #6).

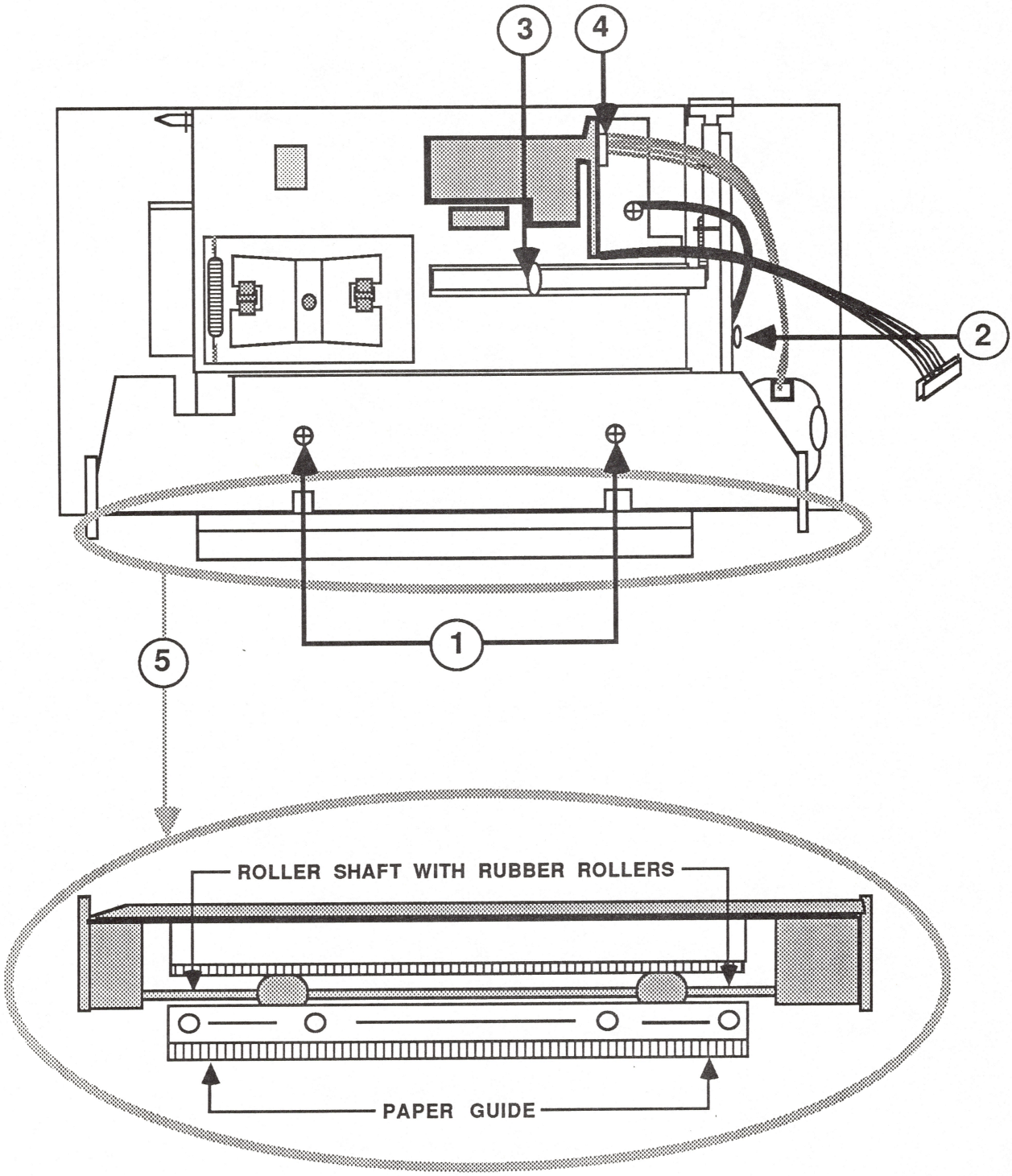

FIGURE 3

FRAME ASSEMBLY

Remove

1. Separate the housing assembly and the paper tray assembly.

2. Remove the two screws that hold the frame assembly (see Figure 3, #1).

3. Remove the grounding screw attached to the frame assembly (see Figure 3, #2).

4. Remove the lever lock attached to a spring (see Figure 3, #3).

5. Remove the connector from the PCB board running to the stepper motor (see Figure 3, #4).

6. Remove the paper guide which snaps into place (see Figure 3, #5).

7. Lift the entire metal frame assembly off of the plastic housing (see shaded area in Figure 3, #5).

Replace

1. Position the metal frame assembly on the plastic housing. Be sure the screw holes line up (see Figure 3, #1). Be sure the paper release button is inserted into the rear of the plastic housing. Replace the two screws (see Figure 3, #1).

2. Position the paper guide and snap it into position (see Figure 3, #5).

3. Plug in the connector (see Figure 3, #4).

4. Replace the lever lock and attach the armed end to the spring (see Figure 3, #3).

5. Replace the grounding strap and screw (see Figure 3, #2).

6. Reconnect the housing assembly and paper tray assembly.

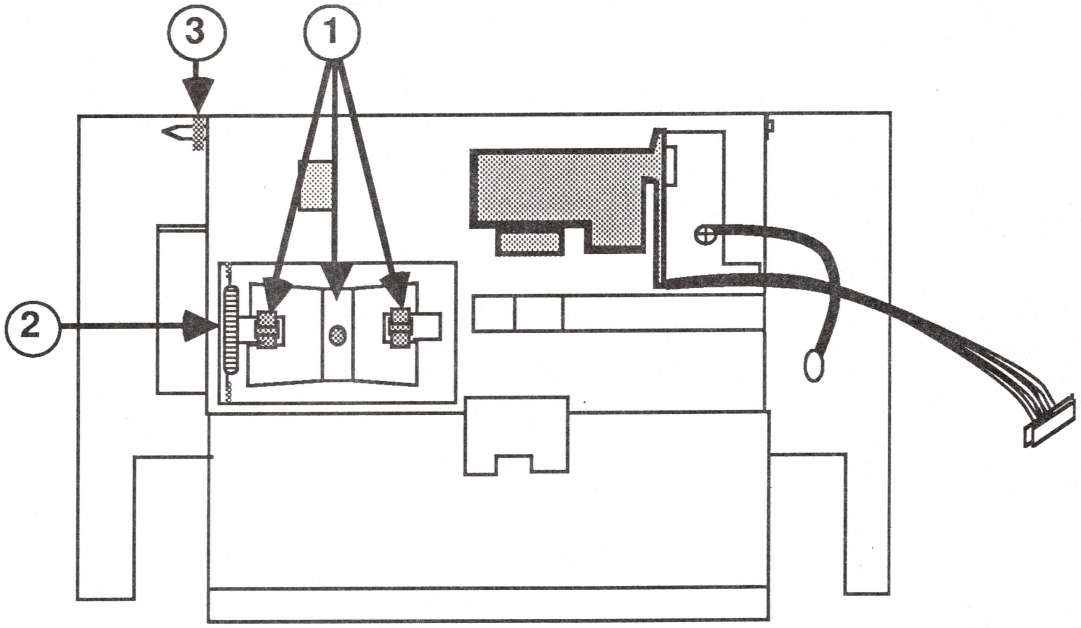

FIGURE 4

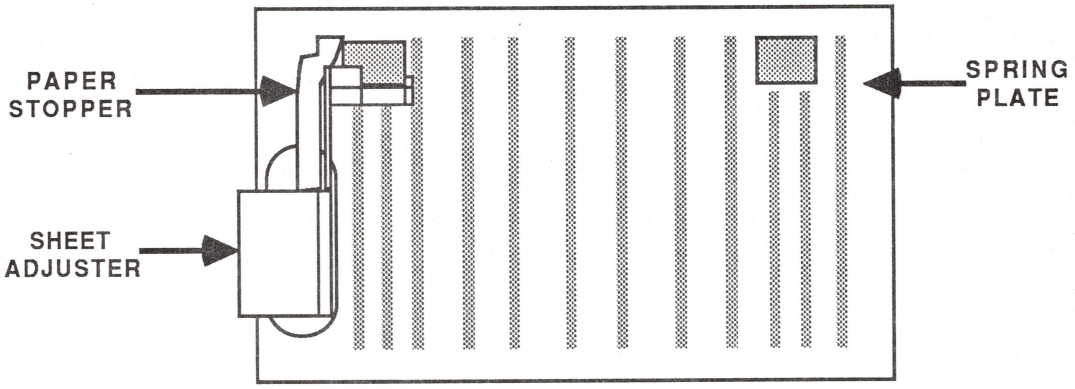

FIGURE 5

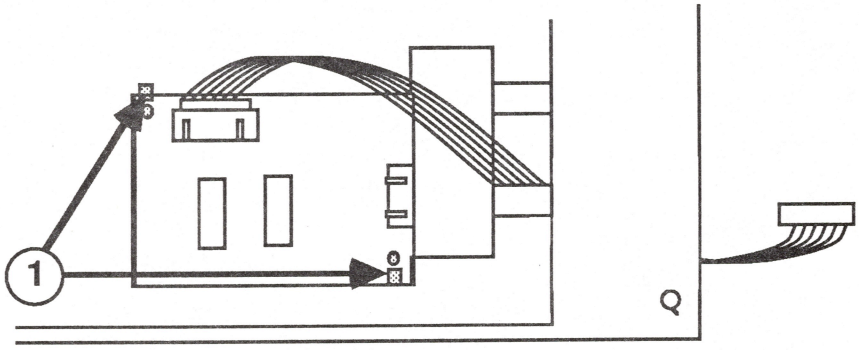

FIGURE 6

PCB ASSEMBLY AND HOUSING ASSEMBLY

NOTE: If you need to identify a part or its location, or to verify which exchange assembly it is included with, refer to Section 7, SheetFeeder Illustrated Parts List.

1. Separate the paper tray assembly and the housing assembly and remove the frame assembly.

2. Remove the metal spring plate, which holds the sheet adjuster in place, by squeezing the tabs together with a pair of needlenose pliers (see Figure 4, #1).

3. Disconnect the spring that holds the paper stopper in place (see Figure 4, #2).

4. Remove the e-ring from the pointed end of the spring plate shaft (see Figure 4, #3).

5. Set the housing assembly on its side, squeeze the tabs (see Figure 4, #1), and push them through the openings in the housing. Turn the housing over and remove the plastic spring plate with the attached pieces (see Figure 5).

6. Note the position of the PCB Assembly. Then remove it by gently prying back the two retaining tabs (see Figure 6, #1).

Replace

1. Position the PCB assembly and snap it into position (see Figure 6, #1).

2. Position the plastic spring plate and the attached pieces so that the tabs line up (see Figure 4, #1), and snap the plastic spring plate into position and hold it there.

3. Insert the spring plate shaft through the housing and the plastic spring plate and attach the e-ring (see Figure 4, #3).

4. Position the metal spring plate and snap it into place over the tabs (see Figure 4, #1).

5. Connect the spring that holds the paper stopper in place (see Figure 4, #2).

6. Replace the frame assembly and connect the paper tray assembly and the housing assembly.

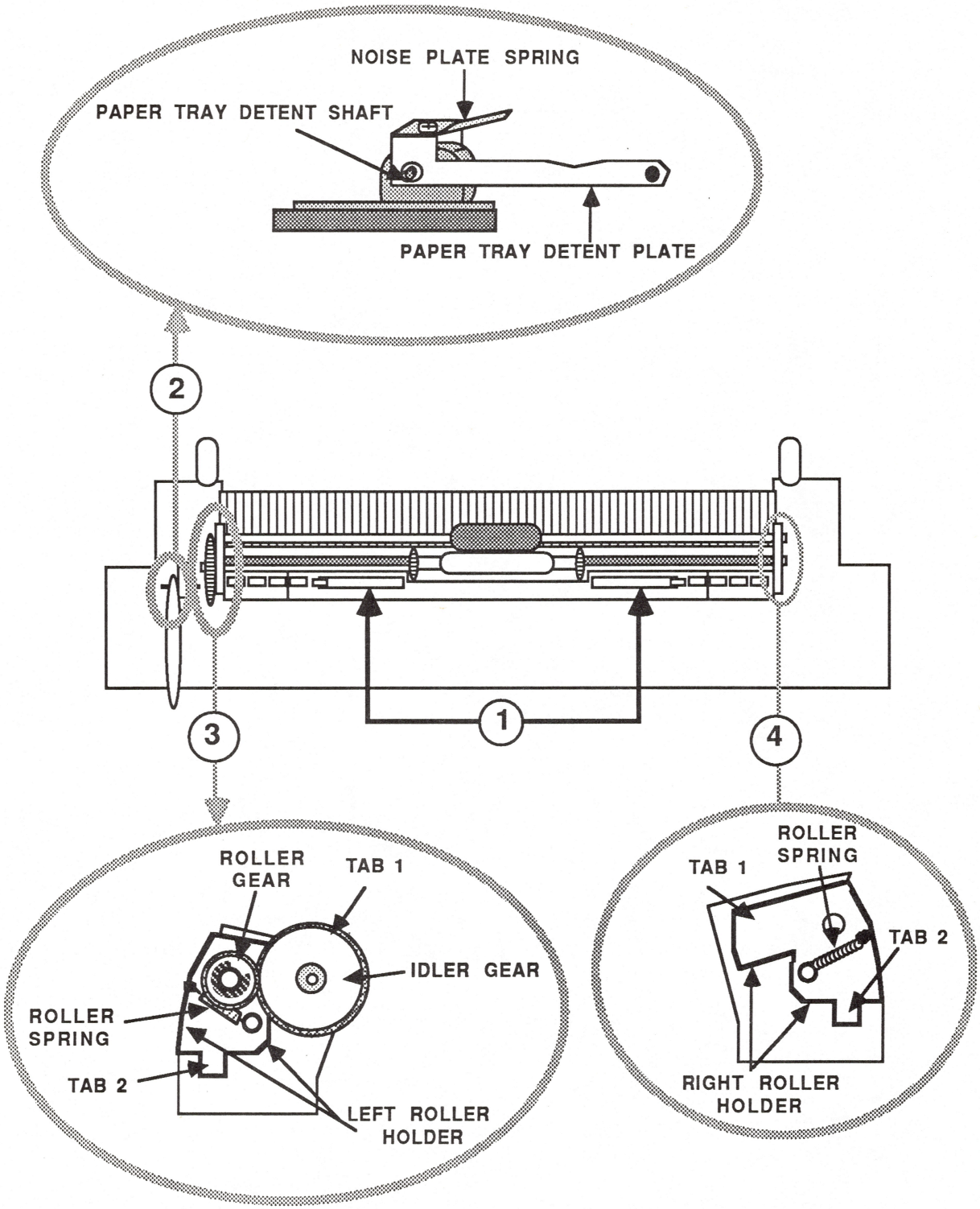
NOISE PLATE SPRING
PAPER TRAY DETENT SHAFT
PAPER TRAY DETENT PLATE
2
1
3
4
ROLLER GEAR
TAB 1
IDLER GEAR
ROLLER SPRING
TAB 2
LEFT ROLLER HOLDER
TAB 1
ROLLER SPRING
TAB 2
RIGHT ROLLER HOLDER

FIGURE 7

PAPER TRAY ASSEMBLY

In the procedures that follow, you will remove the customer's paper tray assembly and take from it the parts which are not included in the exchange assembly. Be sure to put these parts aside. DO NOT DISCARD THEM.

Remove

1. Separate the paper tray assembly from the housing assembly.

2. Lay the paper tray as shown in Figure 7. Pry off the paper tray locks (see Figure 7, #1). Using a small flathead screwdriver, pry off the upper paper tray around the outer edge of the assembly (the hinges are part of the upper paper tray). The tray snaps onto the tabs. Some of the tabs may break off as you remove it.

3. Locate the paper tray detent plate on the left side (see Figure 7, #2). Remove the paper tray detent shaft. Lift the paper tray detent plate off the lower paper tray. Set the parts aside.

4. Gently pull the idler gear, located on the left side of the tray, towards you to release tab 1. At the same time, insert a jeweler's screwdriver under tab 2 and slide the left roller holder free of the tabs (see Figure 7, #3).

5. Using a jeweler's screwdriver, gently pry tab 1 on the right side of the tray loose. Pry tab 2 loose and lift the right roller holder free (see Figure 7, #4).

6. Remove the entire assembly from the lower paper tray.

7. Remove the roller springs located on each side of the assembly (see Figure 7, #3 and #4). The springs hold the roller shaft with the eject shaft in place.

8. Set aside the left and right roller holders, and the one roller shaft still connected to the small gear.

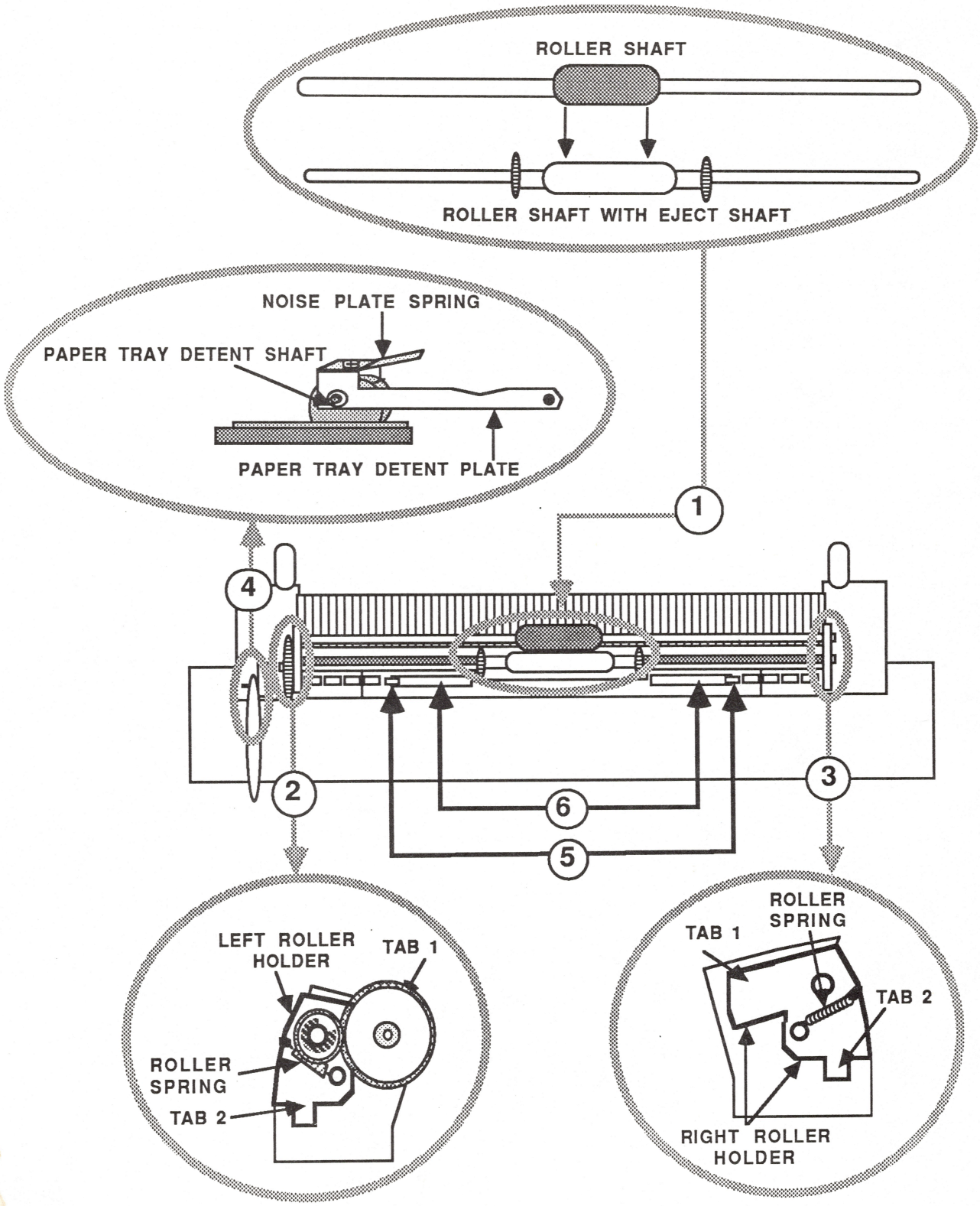
ROLLER SHAFT
ROLLER SHAFT WITH EJECT SHAFT
NOISE PLATE SPRING
PAPER TRAY DETENT SHAFT
PAPER TRAY DETENT PLATE
1
2
3
4
5
6
LEFT ROLLER HOLDER
TAB 1
ROLLER SPRING
TAB 2
ROLLER SPRING
TAB 1
TAB 2
RIGHT ROLLER HOLDER

FIGURE 8

Replace

1. Locate the customer's left and right roller holder and roller shaft. Position the roller shaft with the eject roller so that the black on the customer's roller shaft lines up with the middle section of the eject roller (see Figure 8, #1). Place one side into the left roller holder and connect the spring (see Figure 8, #2). Repeat this on the right roller holder.

2. Position the lower paper tray so it is facing you. Place the roller assembly into position (the white eject shaft should be on the bottom). Snap the roller assembly into position by lining up the four tabs (two on each side) and snap it into position (see Figure 8, #2 and #3).

3. Locate the customer's paper tray detent plate. Position the plate on the left side (see Figure 8, #4). Insert the paper tray detent shaft.

4. Position the upper paper tray onto the lower paper tray. Be sure the two tabs located at the front slide into the lower half (see Figure 8, #5). Snap the tray into position.

5. Reconnect the paper tray locks (see Figure 8, #6).

6. Connect the paper tray assembly to the housing assembly.

Apple Technical Procedures

ImageWriter II

Illustrated Parts List

❑ CONTENTS

The figures and lists above include all parts that can be purchased separately from Apple for the ImageWriter II, along with their part numbers. These are the only parts available from Apple. See your *Service Programs* manual for prices.

Figures 1-8 (overviews) show the orientation of different assemblies in the ImageWriter II. Figures 9 through 25 (enlarged drawings) supplement the Take-Apart section of these procedures by showing how parts fit together. (Screws and washers shown in these figures are not included in the assemblies.)

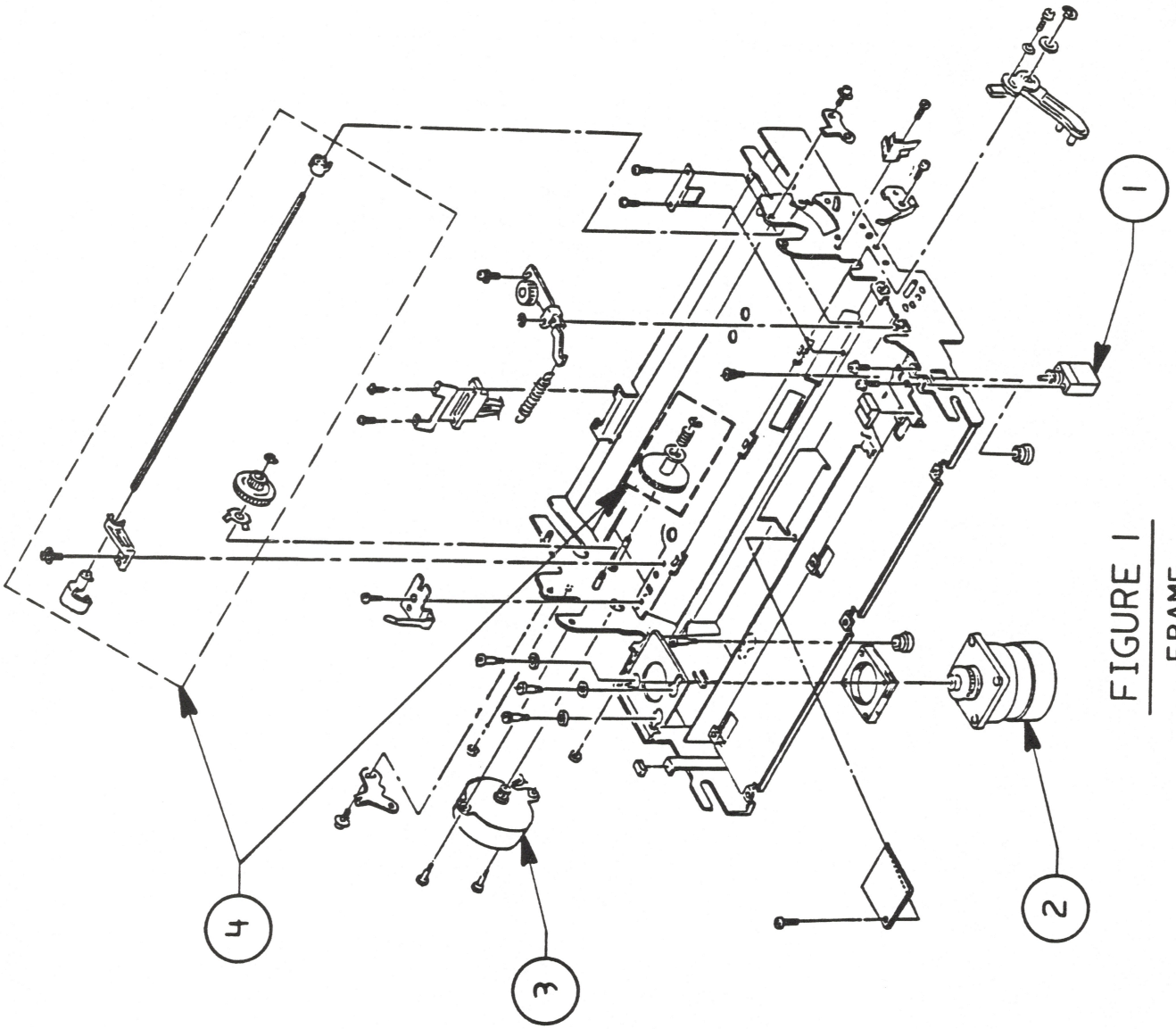

FIGURE 1
FRAME

❑ KEY TO CODES FOR SCREWS, WASHERS, ETC.

All screws are standardized in ISO. All measurements are in millimeters. Diameter is given first, then length. "SM-3 x 8" means "Sems screw, 3mm diameter by 8 mm length." **Screws and washers are not included with assemblies.**

C	=	C-ring	SM	=	sems screw
D	=	dish head screw	SMW	=	double sems screw
E	=	E-ring	SP	=	spring pin
F	=	flat head screw	SW	=	spring washer
FL	=	flanged screw	T	=	tapping screw
H	=	hexagon bolt	TW	=	toothed washer
N	=	hexagon nut	U	=	U-ring
P	=	pan head screw	W	=	washer
S	=	set screw			

❑ IMAGEWRITER II - FRAME (Figure 1)

Item	Part No.	Description
1	937-0001	Power Switch
2	959-0004	Carrier Motor
3	959-0005	Paper Feed Motor
4	076-0150	Shift Gear Assembly (See Figure 9.)

Note: Some of the other parts shown in this diagram are available as "Frame Parts." Refer to Figure 25 for further information.

The following screws, e-clips, etc., are used in the parts shown in Figure 1:

E-3	SMW-2.6 x 6
E-4	SMW-3 x 6
SM-2.6 x 6	SMW-3 x 8
SM-3 x 6	SMW-4 x 6
SM-3 x 8	W-3.3

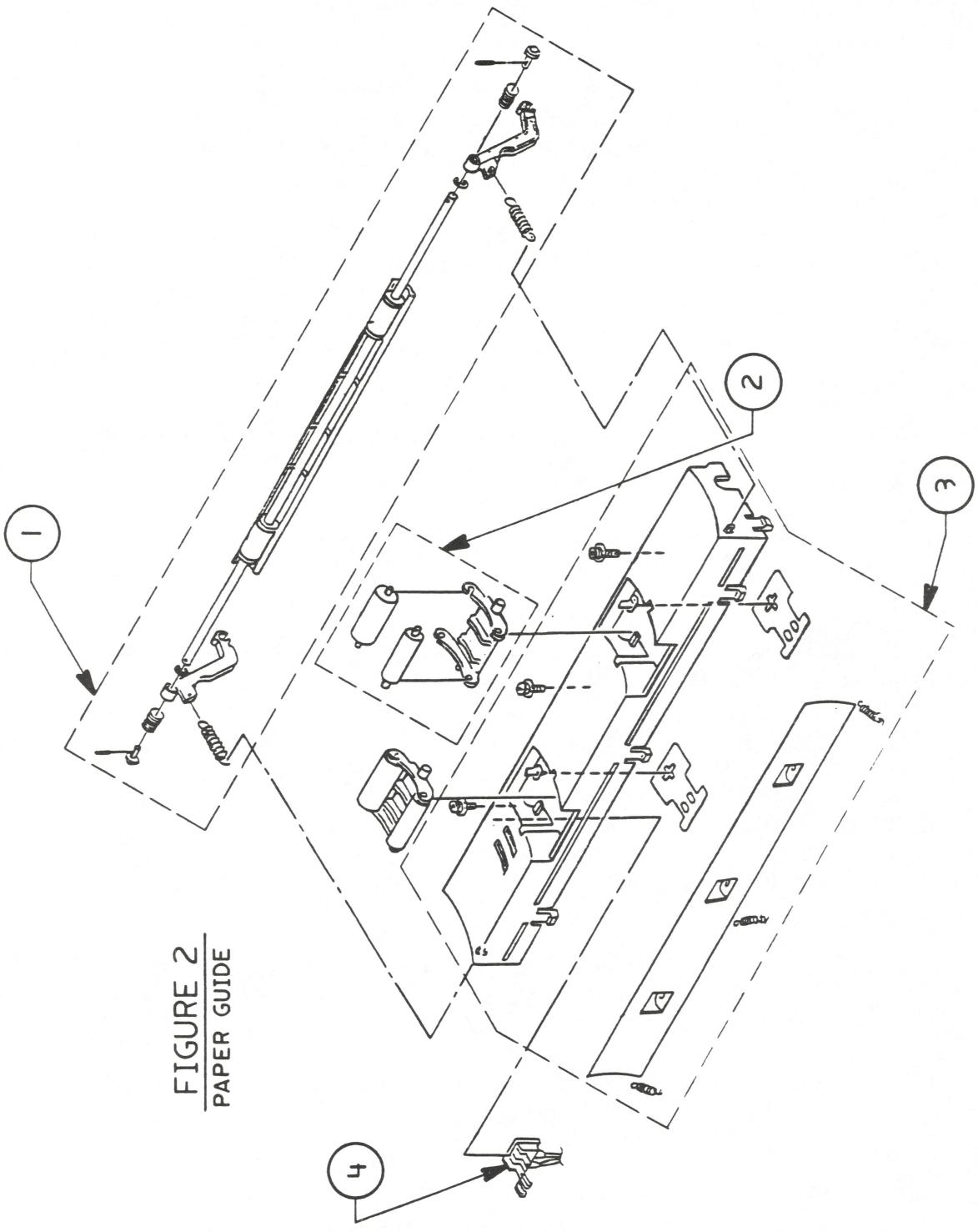

FIGURE 2
PAPER GUIDE

❑ IMAGEWRITER II - PAPER GUIDE (Figure 2)

Item	Part No.	Description
1	076-0154	Paper Bail Assembly (See Figure 10.)
2	076-0155	Pinch Roller Assembly (See Figure 11.)
3	076-0156	Paper Guide Assembly (See Figure 12.)
4	925-0002	Paper-Empty Sensor, Mechanical
	925-0008	Paper-Empty Sensor, Optical

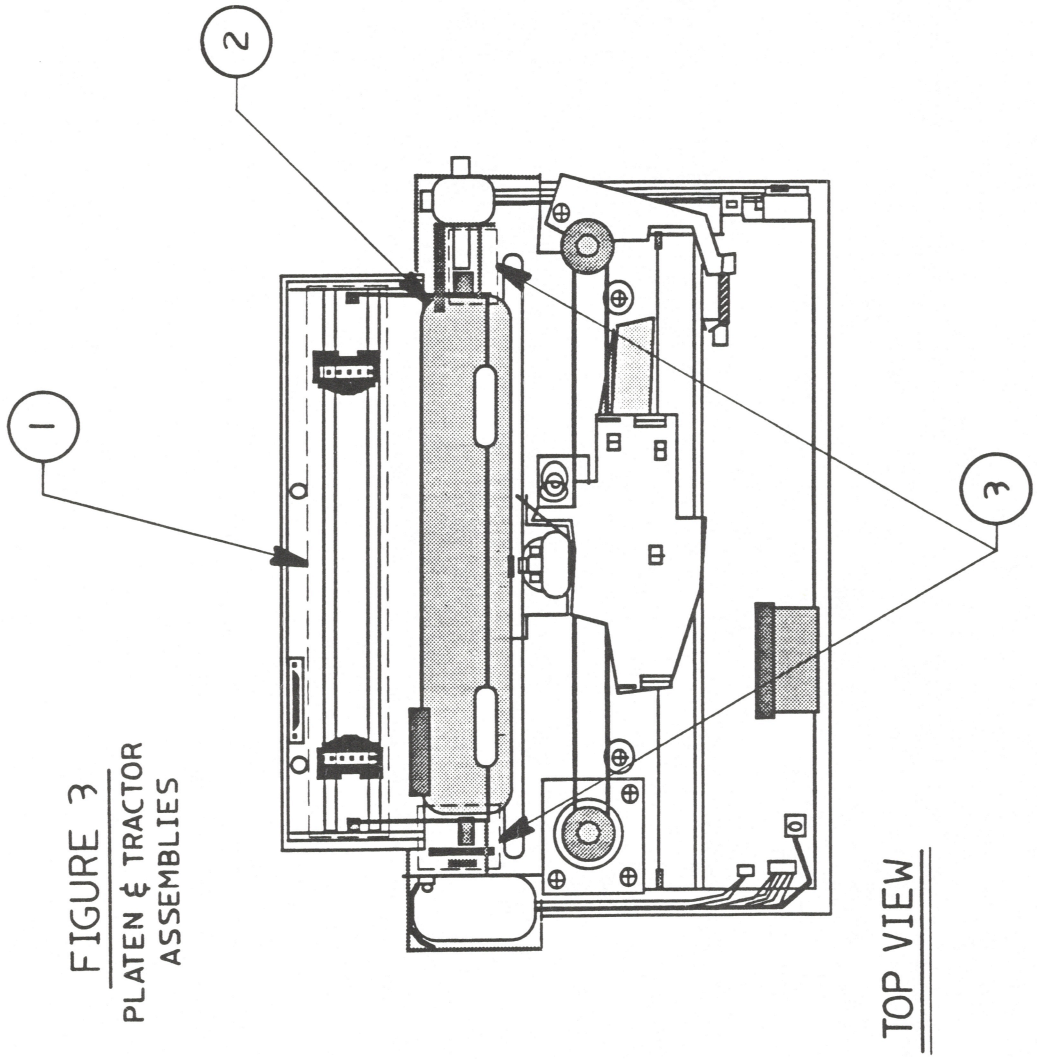

FIGURE 3
PLATEN & TRACTOR ASSEMBLIES

❑ IMAGEWRITER II - PLATEN & TRACTOR ASSEMBLIES, TOP VIEW OF PRINTER (Figure 3)

Item	Part No.	Description
1	076-0152	Tractor Assembly (See Figure 13.)
2	949-0006	Platen
3	076-0153	Platen Assembly Parts without Platen (See Figure 14.)

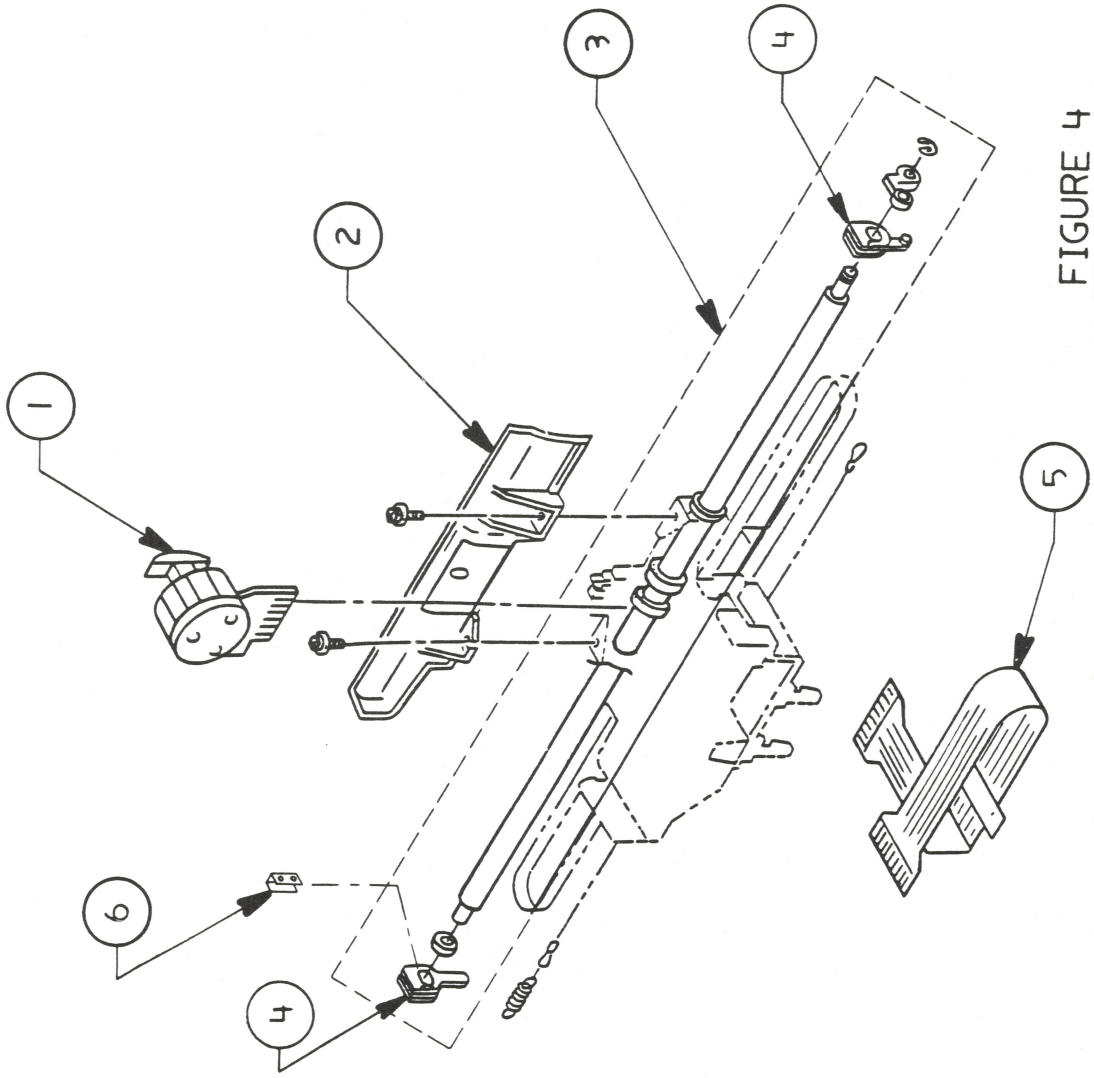

FIGURE 4
CARRIER BLOCK

❑ IMAGEWRITER II - CARRIER BLOCK (Figure 4)

Item	Part No.	Description
1	661-0316	Print Head
2	949-0029	Paper Guide
3	076-0157	Carrier Block Assembly (See Figure 15.)
4	958-0006	Carrier Shaft Bushing
5	936-0006	Flexible Cable
6	955-0005	Shims, ImageWriter II

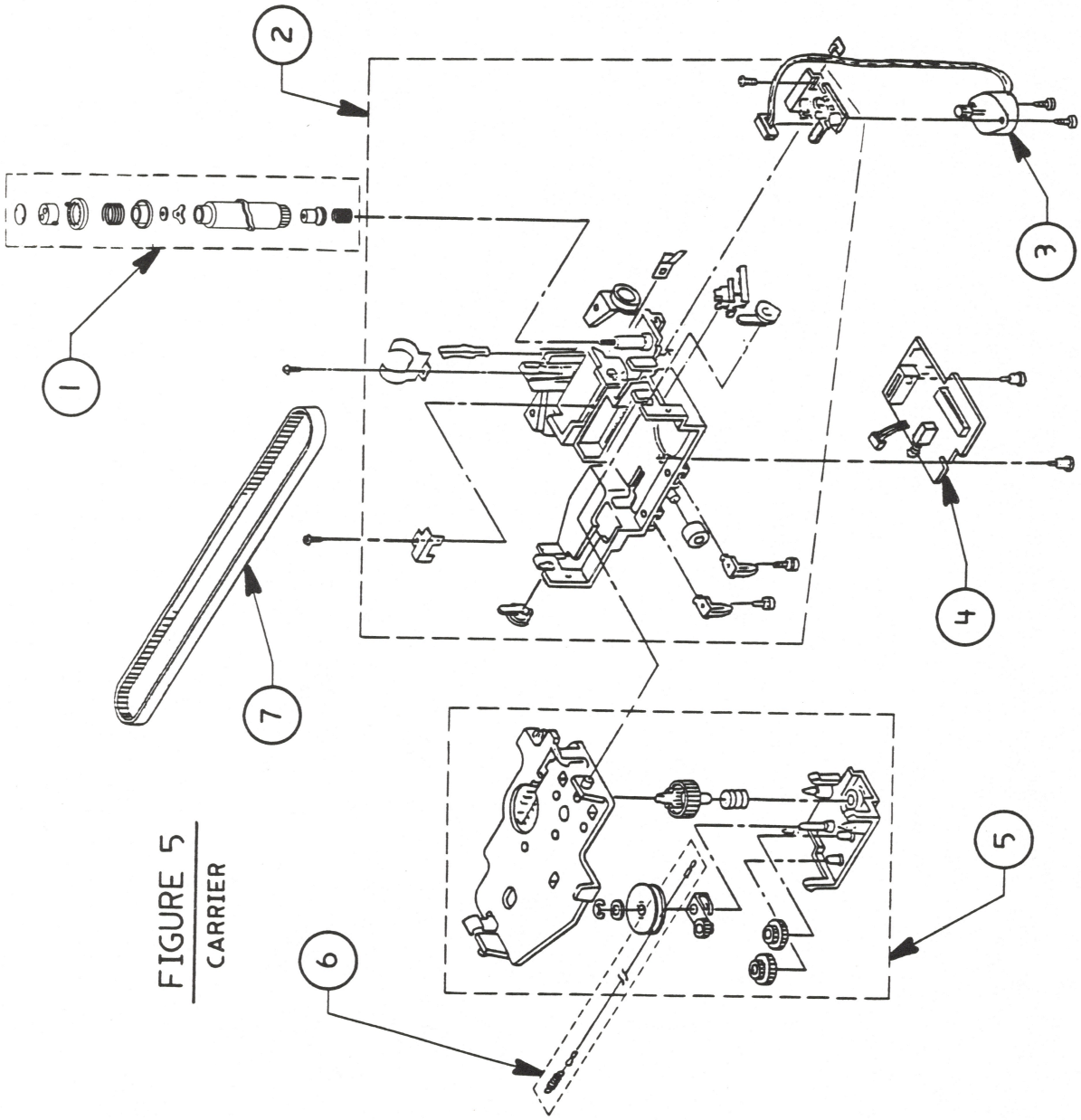

FIGURE 5
CARRIER

❑ IMAGEWRITER II - CARRIER (Figure 5)

Item	Part No.	Description
1	076-0158	Color Ribbon Assembly (See Figure 16.)
2	076-0160	Carrier Parts (See Figure 17.)
3	959-0003	Motor Assembly, Ribbon
4	962-0001	Print Head PCB
5	076-0159	Ribbon Frame Assembly (See Figure 18.)
6	935-0001	Ribbon Wire and Spring (See Figure 19.)
7	959-0002	Carrier Belt

The following screws, e-clips, etc., are used in the parts shown in Figure 5:

E-3
E-4
P-2.6 x 6
P-2.6 x 8
SM-2.6 x 5
SM-3 x 10
T-2.6 x 5
W-5.5

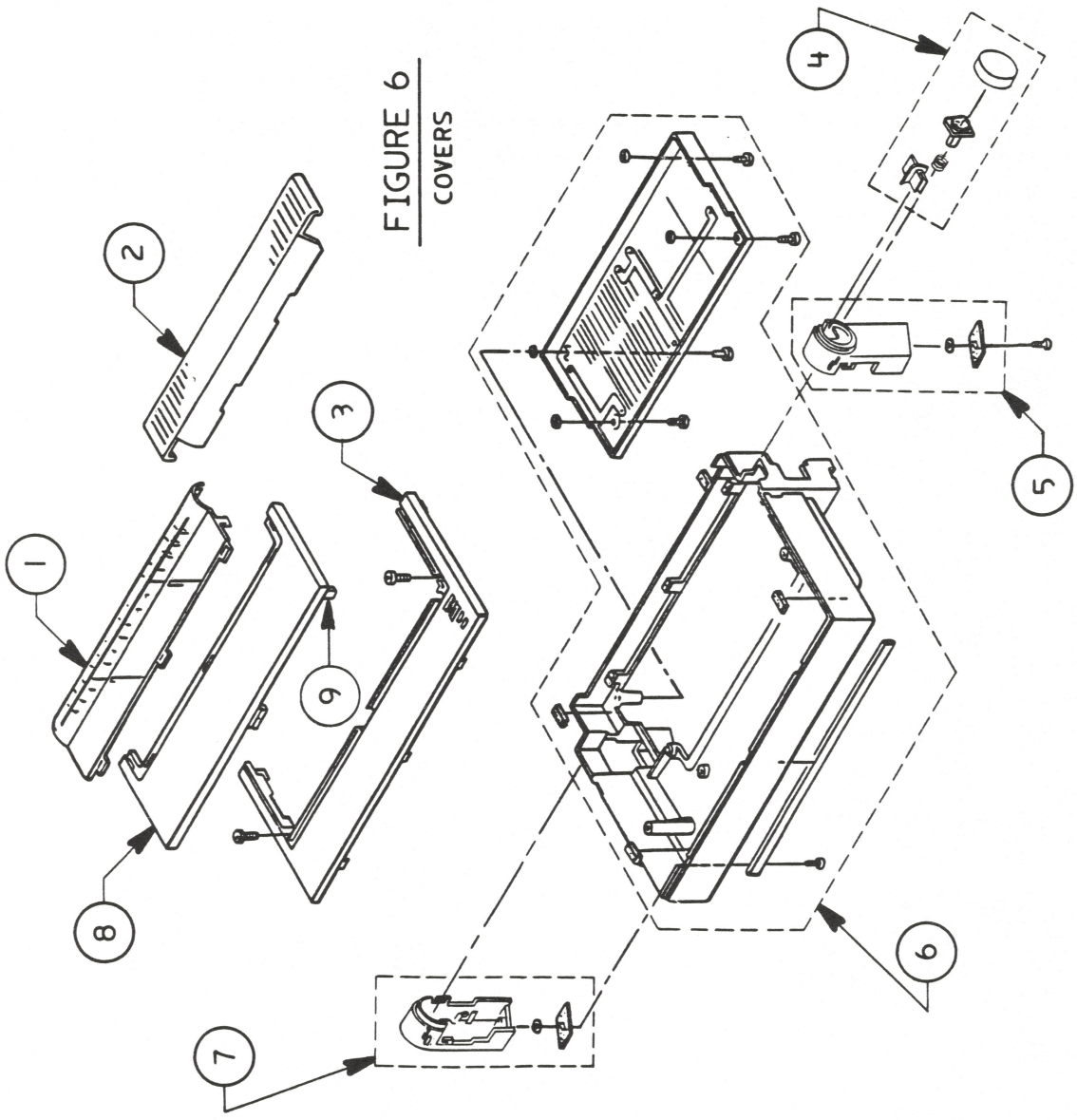

FIGURE 6
COVERS

❑ IMAGEWRITER II - COVERS (Figure 6)

Item	Part No.	Description
1	949-0008	Paper Cover
2	949-0010	Tractor Cover, White
	949-0085	Tractor Cover, Platinum
3	949-0011	Top Cover, White
	949-0086	Top Cover, Platinum
4	076-0164	Platen Assembly Knob, White
	076-0239	Platen Assembly Knob, Platinum (See Figure 20.)
5	076-0163	Support Leg Assembly (Right), White
	076-0238	Support Leg Assembly (Right), Platinum (See Figure 21.)
6	076-0161	Bottom Assembly Cover, White
	076-0236	Bottom Assembly Cover, Platinum (See Figure 22.)
7	076-0162	Support Leg Assembly (Left), White
	076-0237	Support Leg Assembly (Left), Platinum (See Figure 23.)
8	949-0009	Ribbon Cover, White
	949-0084	Ribbon Cover, Platinum
9	952-0012	Case Top Magnet

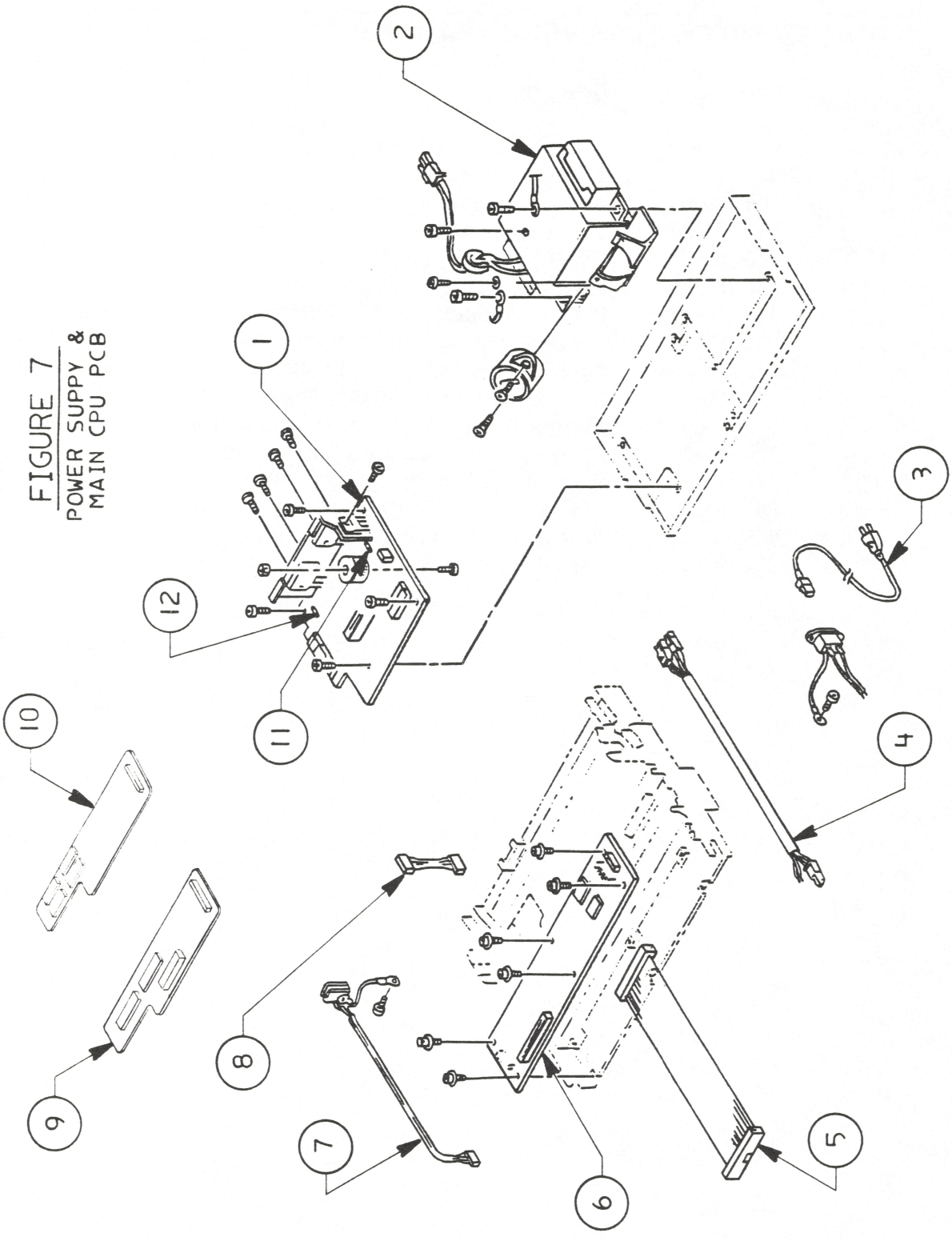
FIGURE 7
POWER SUPPY &
MAIN CPU PCB
1
2
3
4
5
6
7
8
9
10
11
12

❑ IMAGEWRITER II - POWER SUPPLY & MAIN CPU PCB (Figure 7)

Item	Part No.	Description
1	661-0303	ImageWriter II Drive PCB
2	915-0001	Transformer, 120V
3	936-0001	Power Cord, 110V
4	936-0009	Cable, Power Switch Interconnection
5	936-0007	Cable, PCB Interconnection
6	661-0304	ImageWriter II Main CPU PCB
	661-0413	ImageWriter II Main CPU PCB, Rev A
7	936-0003	Cable, Interface
8	936-0008	Cable, Operation Panel
9	661-0319	ImageWriter II 32K Option Card
10	661-0325	ImageWriter II AppleTalk Option Card
11	740-0022	Fuse, 5A
12	941-0002	Fuse, 1A

The following screws, e-clips, etc., are used in the parts shown in Figure 7:

N-4
P-3 x 3
P-3 x 6
P-3 x 12
P-4 x 30
SMW-3 x 6
SMW-3 x 8
SMW-4 x 8
W-3.3

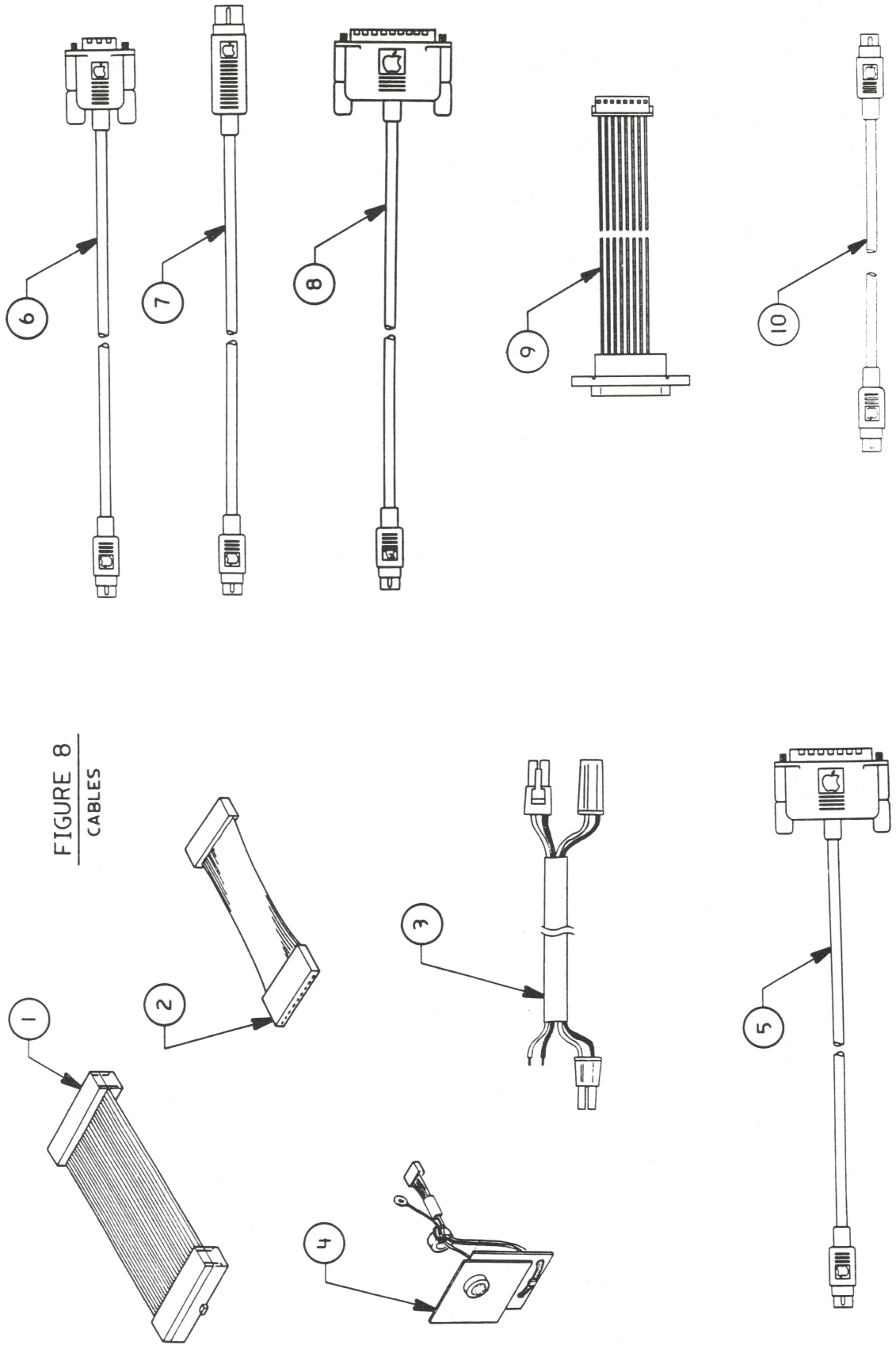

FIGURE 8
CABLES

❑ IMAGEWRITER II - CABLES (Figure 8)

Item	Part No.	Description
1	936-0007	Cable, PCB Interconnection
2	936-0008	Cable, Operation Panel
3	936-0009	Cable, Noise Filter
4	936-0003	Cable, Interface
5	590-0555	Cable, APM/ImageWriter II to Apple III, Macintosh XL, Smoke
6	590-0551	Cable, APM/ImageWriter II to Macintosh, Smoke
7	590-0333	Cable, ImageWriter II to Apple IIc, White
	590-0554	Cable, ImageWriter II to Apple IIc, Smoke
8	590-0335	Cable, ImageWriter II to Apple II, II+, IIe, White
	590-0556	Cable, ImageWriter II to Apple II, II+, IIe, Smoke
9	936-0034	Cable, SheetFeeder, ImageWriter II
10	590-0552	Cable, APM/ImageWriter II to Apple IIGS, Macintosh Plus, Smoke

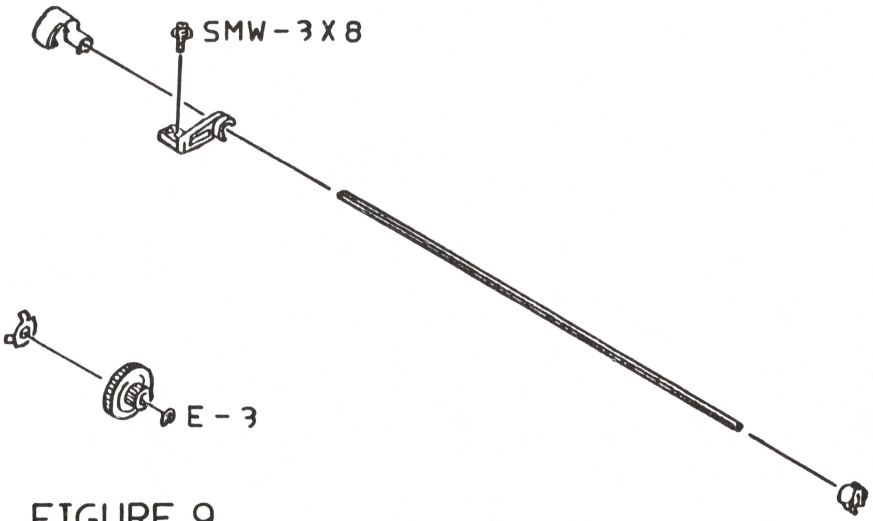

FIGURE 9
SHIFT GEAR ASSEMBLY

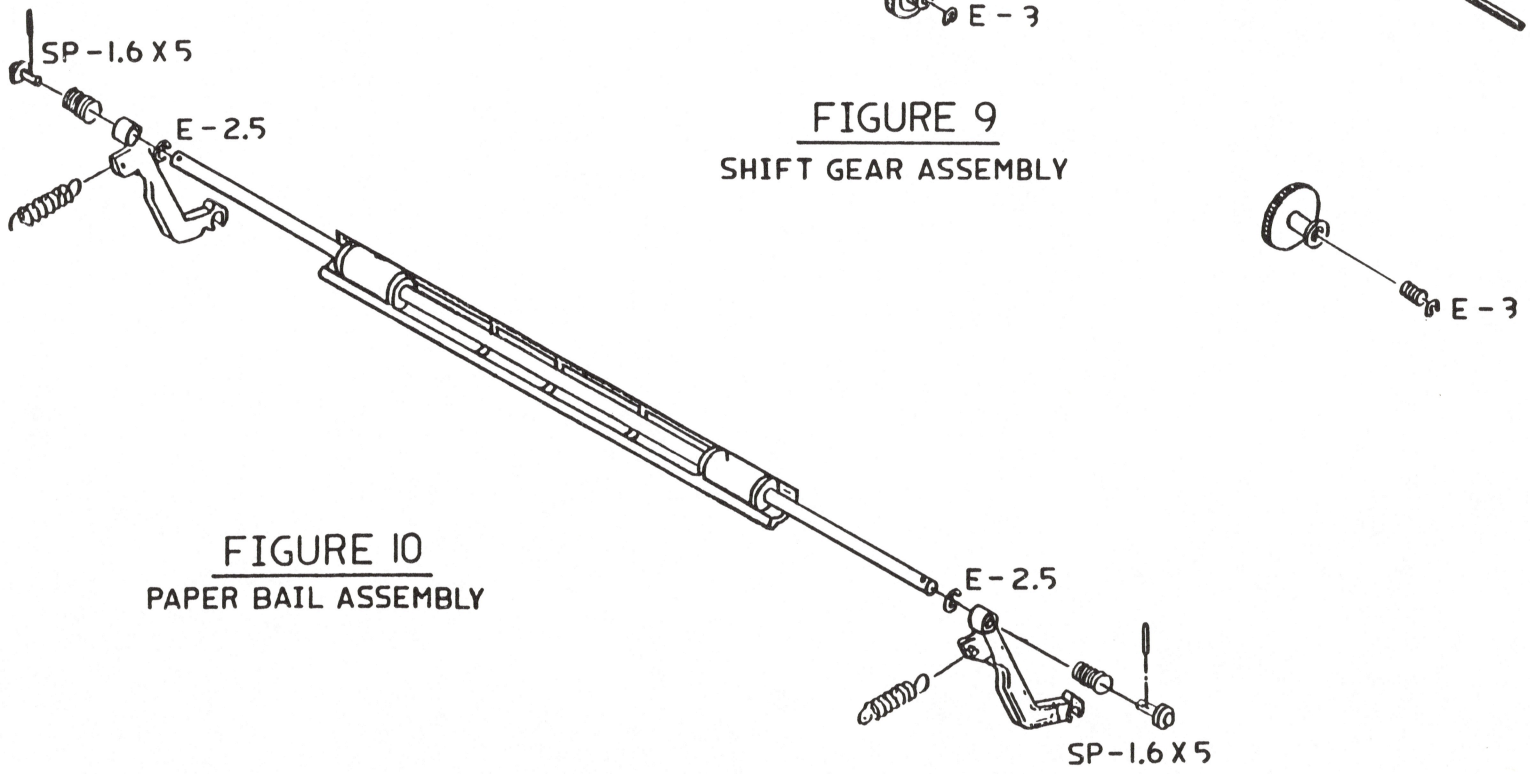

FIGURE 10
PAPER BAIL ASSEMBLY

❑ IMAGEWRITER II - SHIFT GEAR ASSEMBLY (Figure 9)

Item	Part No.	Description
-	076-0150	Shift Gear Assembly

❑ IMAGEWRITER II - PAPER BAIL ASSEMBLY (Figure 10)

Item	Part No.	Description
-	076-0154	Paper Bail Assembly

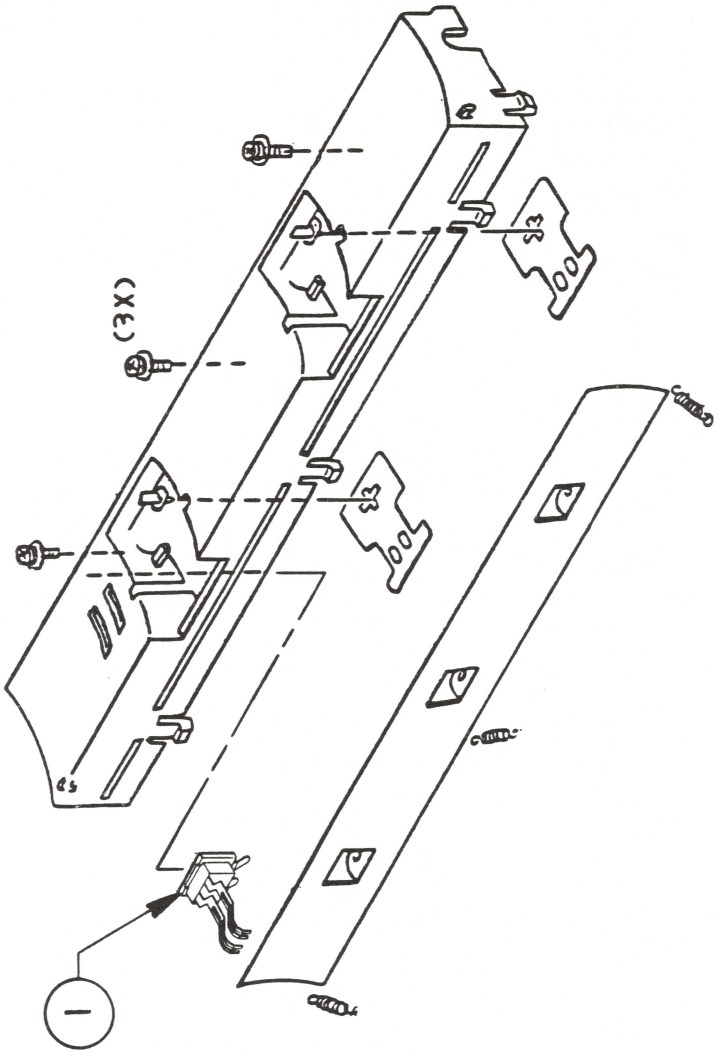

FIGURE 12
PAPER GUIDE ASSEMBLY

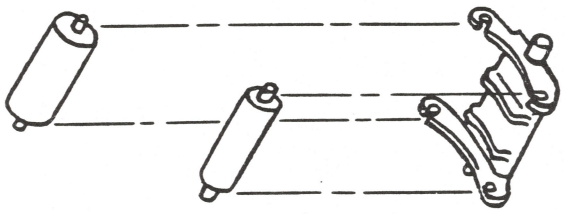

FIGURE 11
PINCH ROLLER ASSEMBLY

❑ IMAGEWRITER II - PINCH ROLLER ASSEMBLY (Figure 11)

Item	Part No.	Description
-	076-0155	Pinch Roller Assembly

❑ IMAGEWRITER II - PAPER GUIDE ASSEMBLY (Figure 12)

Item	Part No.	Description
1	949-0130	Paper Guide for Mechanical Sensor
	949-0131	Paper Guide for Optical Sensor

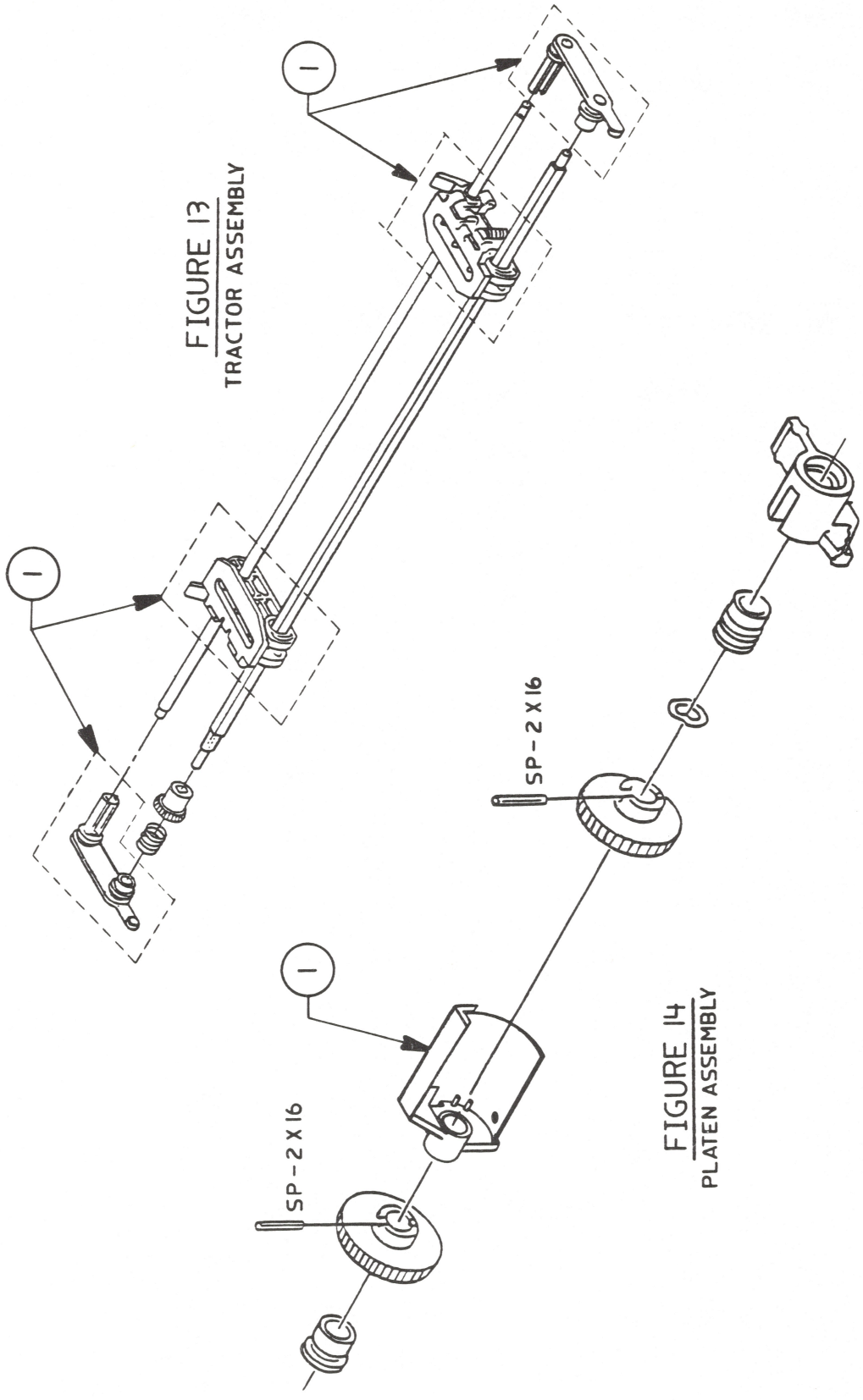

FIGURE 13
TRACTOR ASSEMBLY

FIGURE 14
PLATEN ASSEMBLY

❑ IMAGEWRITER II - TRACTOR ASSEMBLY (Figure 13)

Item	Part No.	Description
-	076-0152	Tractor Assembly (includes all parts shown)
1	076-0151	Tractor with Bush (includes only items marked "1")

❑ IMAGEWRITER II - PLATEN ASSEMBLY (Figure 14)

Item	Part No.	Description
-	076-0153	Platen Assembly Parts without Platen
1	948-0017	Paper Out Sensor Frame (only)

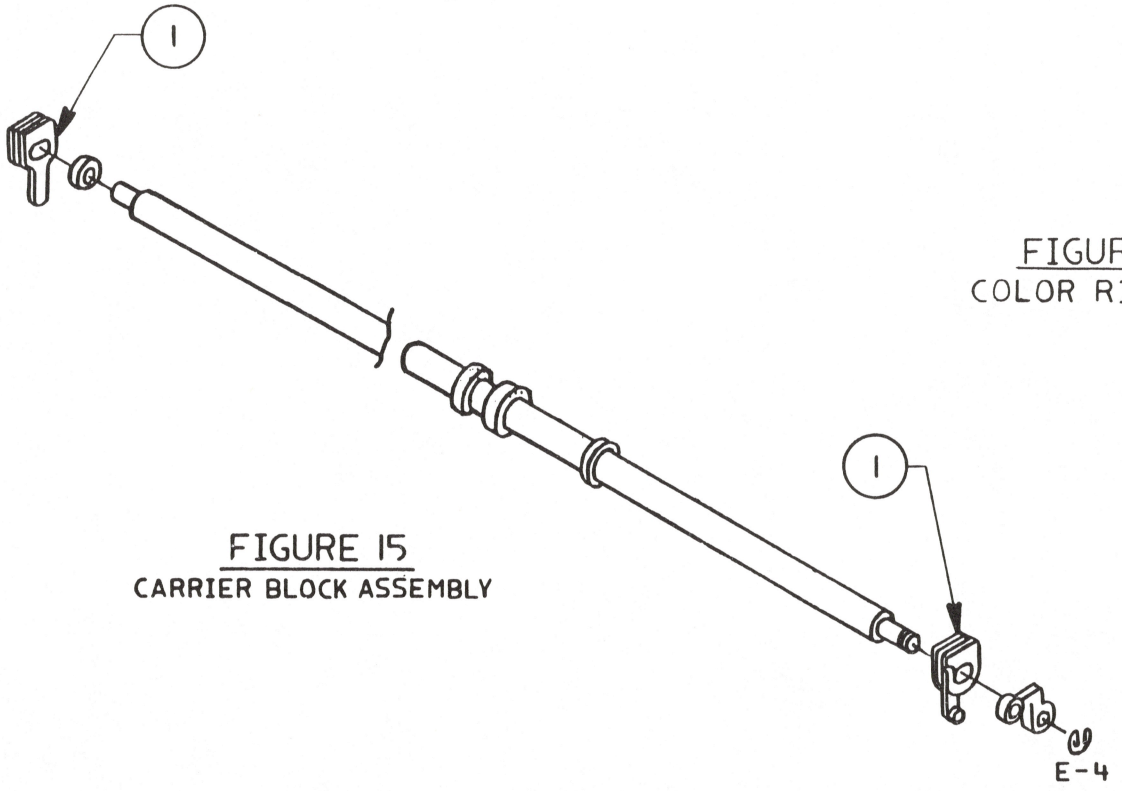

FIGURE 15
CARRIER BLOCK ASSEMBLY

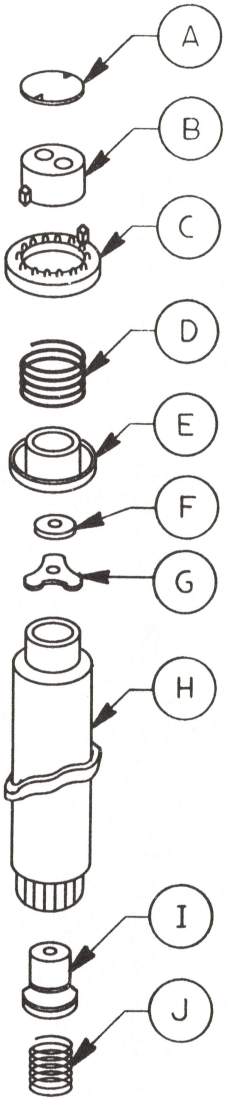

FIGURE 16
COLOR RIBBON ASSY.

❑ IMAGEWRITER II - CARRIER BLOCK ASSEMBLY (Figure 15)

Item	Part No.	Description
-	076-0157	Carrier Block Assembly - includes all parts shown
1	958-0006	Bushing, Carrier Shaft

❑ IMAGEWRITER II - COLOR RIBBON ASSEMBLY (Figure 16)

Item	Part No.	Description
-	076-0158	Color Ribbon Assembly

"Color Ribbon Assembly" consists of the items listed below. They are not available for purchase separately, but are identified to assist you in assembling them. Instructions to assemble are located in Section 3, Take-Apart.

A Stopper Seal
B Stopper
C Adjust Knob
D Rock Spring
E Adjust Collar
F Sift Cam Washer
G Wave Washer
H Sift Cam Ribbon
I Adjust Nut
J Spring Adjust

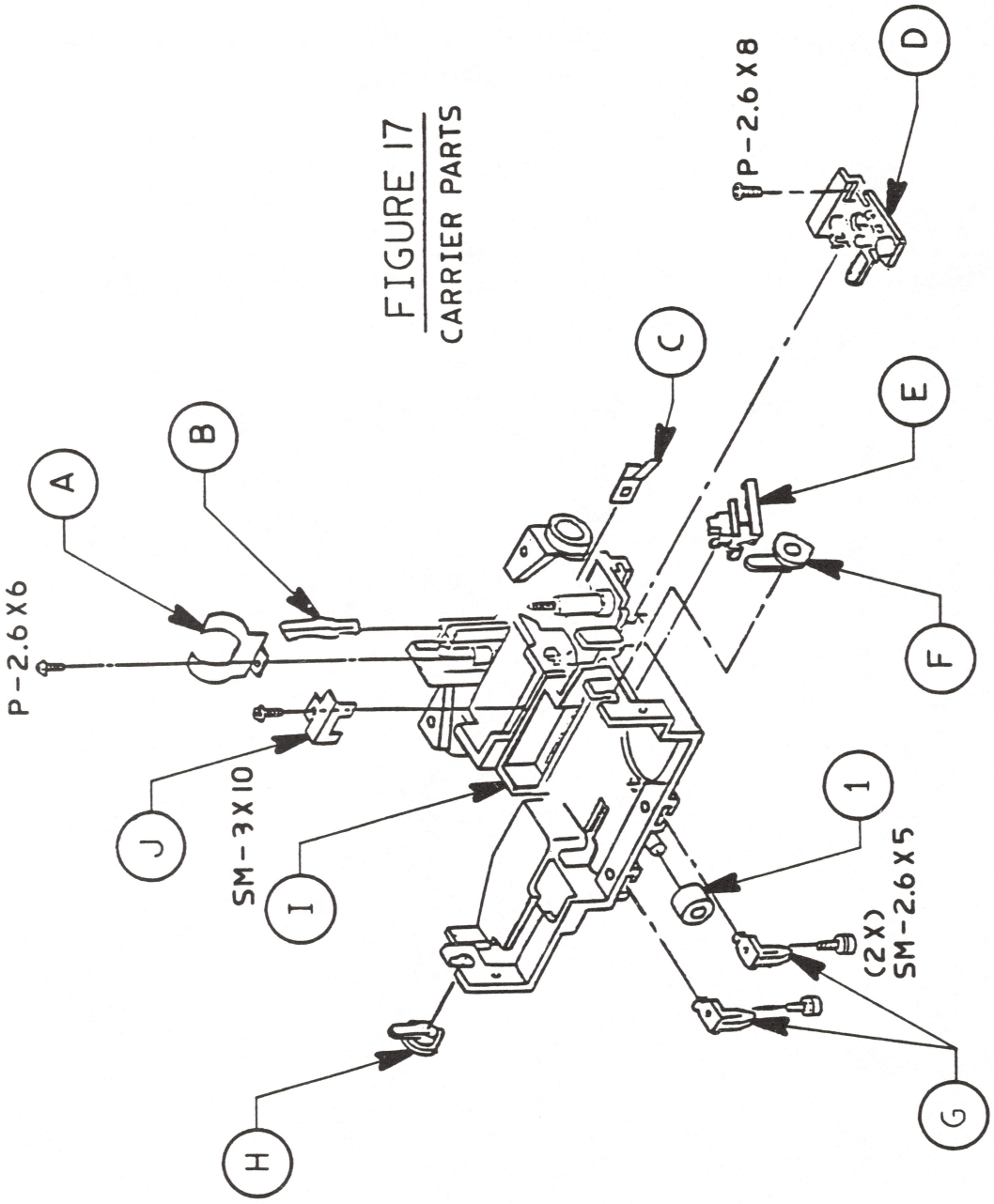
FIGURE 17
CARRIER PARTS
A
B
C
D
E
F
G
H
I
J
1
P-2.6X6
SM-3X10
P-2.6X8
(2X)
SM-2.6X5

❑ IMAGEWRITER II - CARRIER PARTS (Figure 17)

Item	Part No.	Description
	076-0160	Carrier Parts
1	949-0129	Carrier Roller

"Carrier Parts" consists of the items listed below. They are not available for purchase separately, but are identified to assist you in assembling them. Instructions to assemble are located in Section 3, Take-Apart.

A	Spring Head
B	Print Head Clamp
C	Tab, Ribbon Shift Spring
D	Ribbon Kit
E	Lead Wire Guide
F	Tab, Ribbon Frame, Right
G	Carrier Clamp
H	Tab, Ribbon Frame, Left
I	Carrier
J	Belt Guide

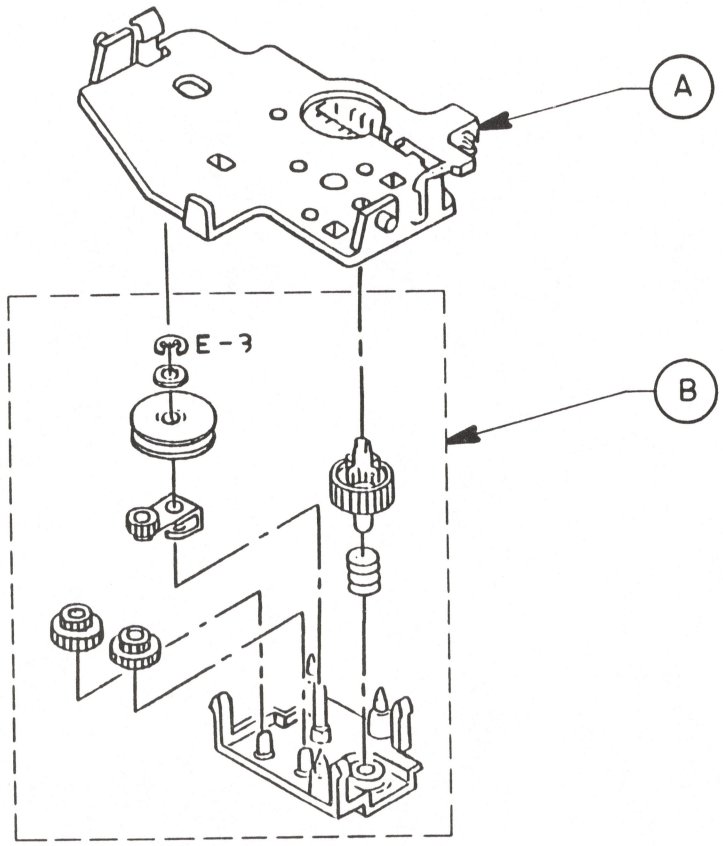

FIGURE 18
RIBBON FRAME ASSEMBLY

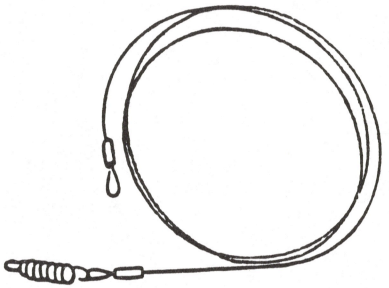

FIGURE 19
RIBBON WIRE & SPRING

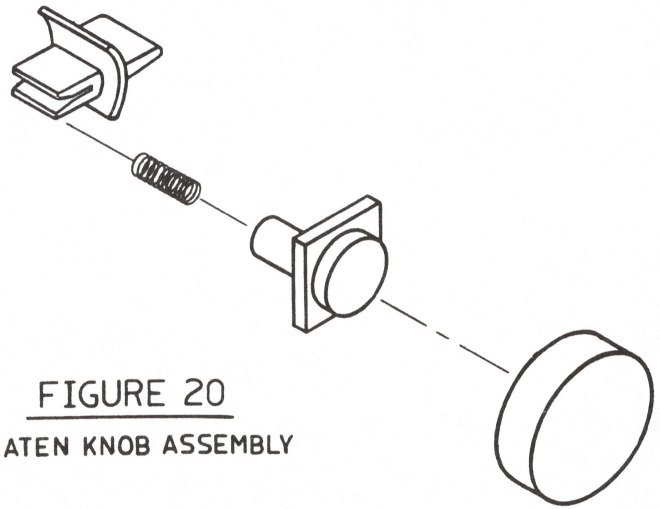

FIGURE 20
PLATEN KNOB ASSEMBLY

❑ IMAGEWRITER II - RIBBON FRAME ASSEMBLY (Figure 18)

Item	Part No.	Description
-	076-0159	Ribbon Frame Assembly

"Ribbon Frame Assembly" consists of the parts listed below. Items are not available for purchase separately, but are identified to assist you in assembling them. Instructions to assemble are in Section 3, Take-Apart.

A Ribbon Plate
B Ribbon Wire Assembly

❑ IMAGEWRITER II - RIBBON WIRE AND SPRING (Figure 19)

Item	Part No.	Description
-	935-0001	Ribbon Wire and Spring

❑ IMAGEWRITER II - PLATEN KNOB ASSEMBLY (Figure 20)

Item	Part No.	Description
-	076-0164	Platen Knob Assembly, Beige
-	076-0239	Platen Knob Assembly, Platinum

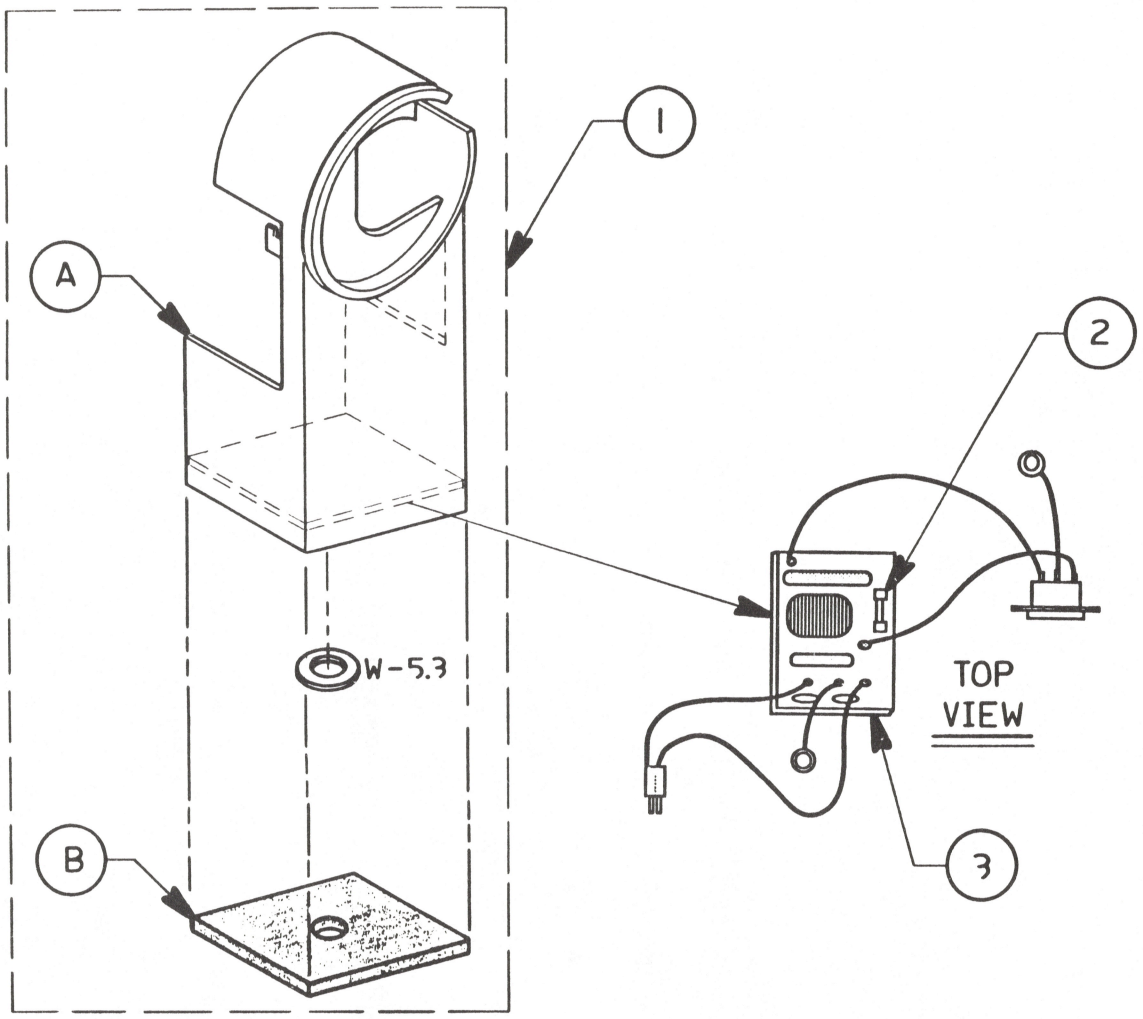

FIGURE 21

SUPPORT LEG ASSEMBLY (RIGHT)

❑ IMAGEWRITER II - SUPPORT LEG ASSEMBLY (Right) (Figure 21)

Item	Part No.	Description
1	076-0163	Support Leg Assembly (Right), White
	076-0238	Support Leg Assembly (Right), Platinum
2	941-0001	Fuse MT4-2A
3	961-0001	Noise Filter PCB Assembly

"Support Leg Assembly (Right)" consists of the parts listed below. These items cannot be purchased separately; they are identified to assist you in assembling them. Instructions to assemble are located in Section 3, Take-Apart.

A Support Leg, Right
B Support, Rubber Foot

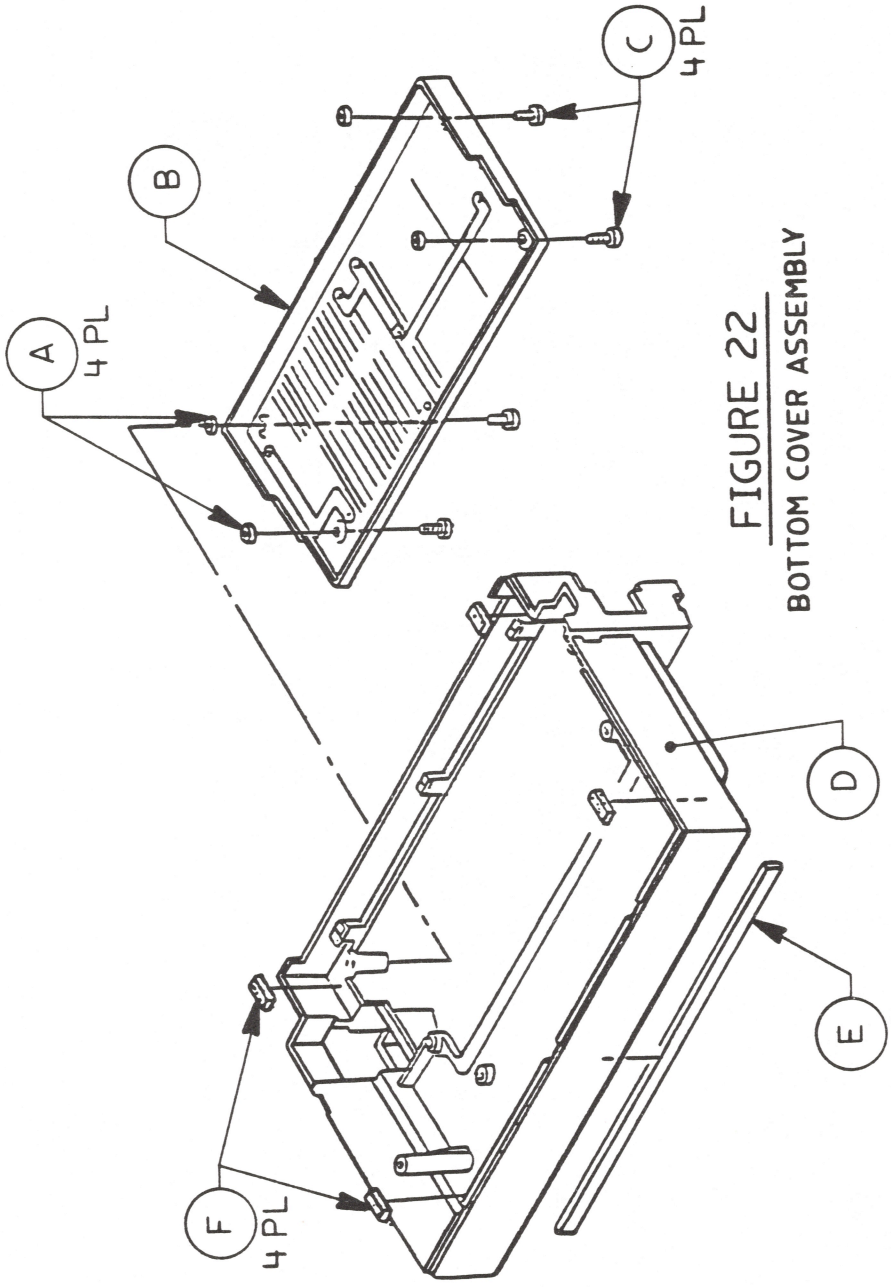

FIGURE 22
BOTTOM COVER ASSEMBLY

❑ IMAGEWRITER II - BOTTOM COVER ASSEMBLY (Figure 22)

Item	Part No.	Description
-	076-0161	Bottom Cover Assembly, White
-	076-0236	Bottom Cover Assembly, Platinum

This assembly includes:

A Access Stopper
B Access Cover
C Access Screw
D Bottom Cover
E Rubber Foot
F Print Cushion Rubber

FIGURE 23

SUPPORT LEG ASSEMBLY (LEFT)

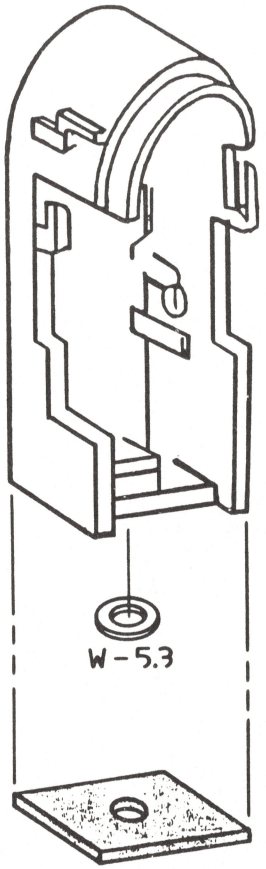

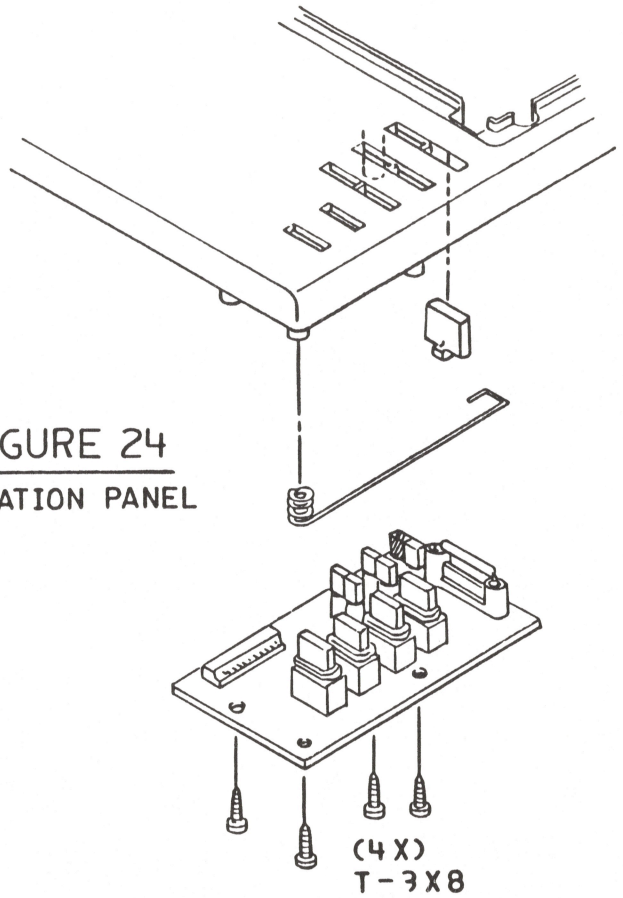

FIGURE 24

OPERATION PANEL

❑ IMAGEWRITER II - SUPPORT LEG ASSEMBLY (Left) (Figure 23)

Item	Part No.	Description
-	076-0162	Support Leg Assembly (Left), White
-	076-0237	Support Leg Assembly (Left), Platinum

❑ IMAGEWRITER II - OPERATION PANEL (Figure 24)

Item	Part No.	Description
-	076-0165	Operation Panel, White
-	076-0240	Operation Panel, Platinum

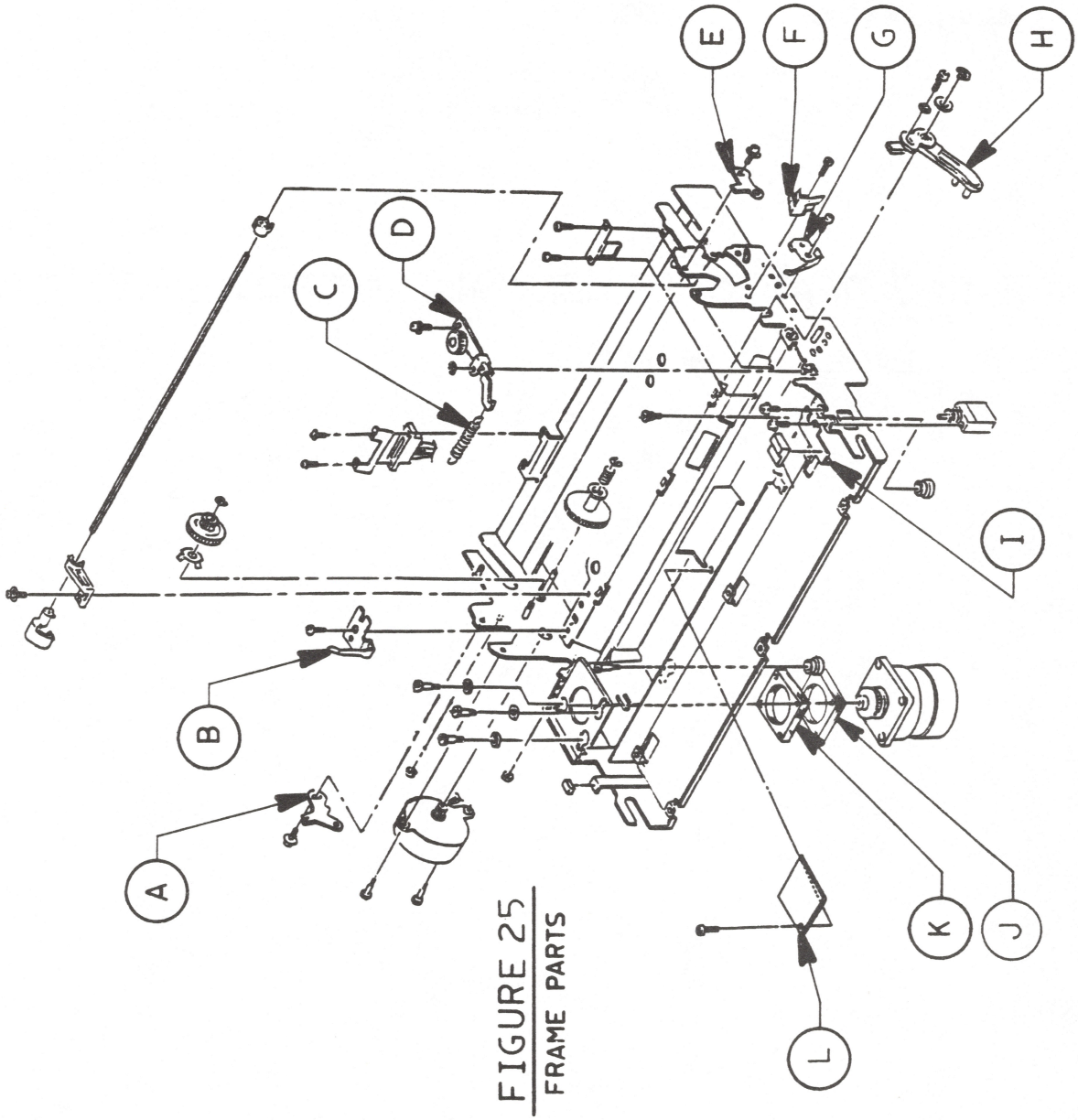

FIGURE 25
FRAME PARTS

❑ IMAGEWRITER II - FRAME PARTS (Figure 25)

Item	Part No.	Description
	076-0200	Frame Parts

"Frame Parts" consists of the items listed below. Items are not available for purchase separately, but are identified to assist you in assembling them.

A	Plate, Platen Bush (Left)
B	Plate, Carrier Shaft Spring (Left)
C	Spring, Carrier Pulley Arm
D	Arm, Carrier Pulley
E	Plate, Platen Bush (Right)
F	Plate, Free Lever Spring
G	Plate, Carrier Shaft Spring (Right)
H	Lever (A), Impression Control
I	Cover, Switch Cable,
J	Cushion (A), Carrier Motor
K	Cushion (B), Carrier Motor
L	Guide, Flexible Cable

Apple Technical Procedures

ImageWriter II

SheetFeeder Illustrated Parts List

❑ CONTENTS

The figures and lists above include all parts that can be purchased separately from Apple for the ImageWriter II SheetFeeder, along with their part numbers. These are the only parts available from Apple. See your Service Programs manual for prices.

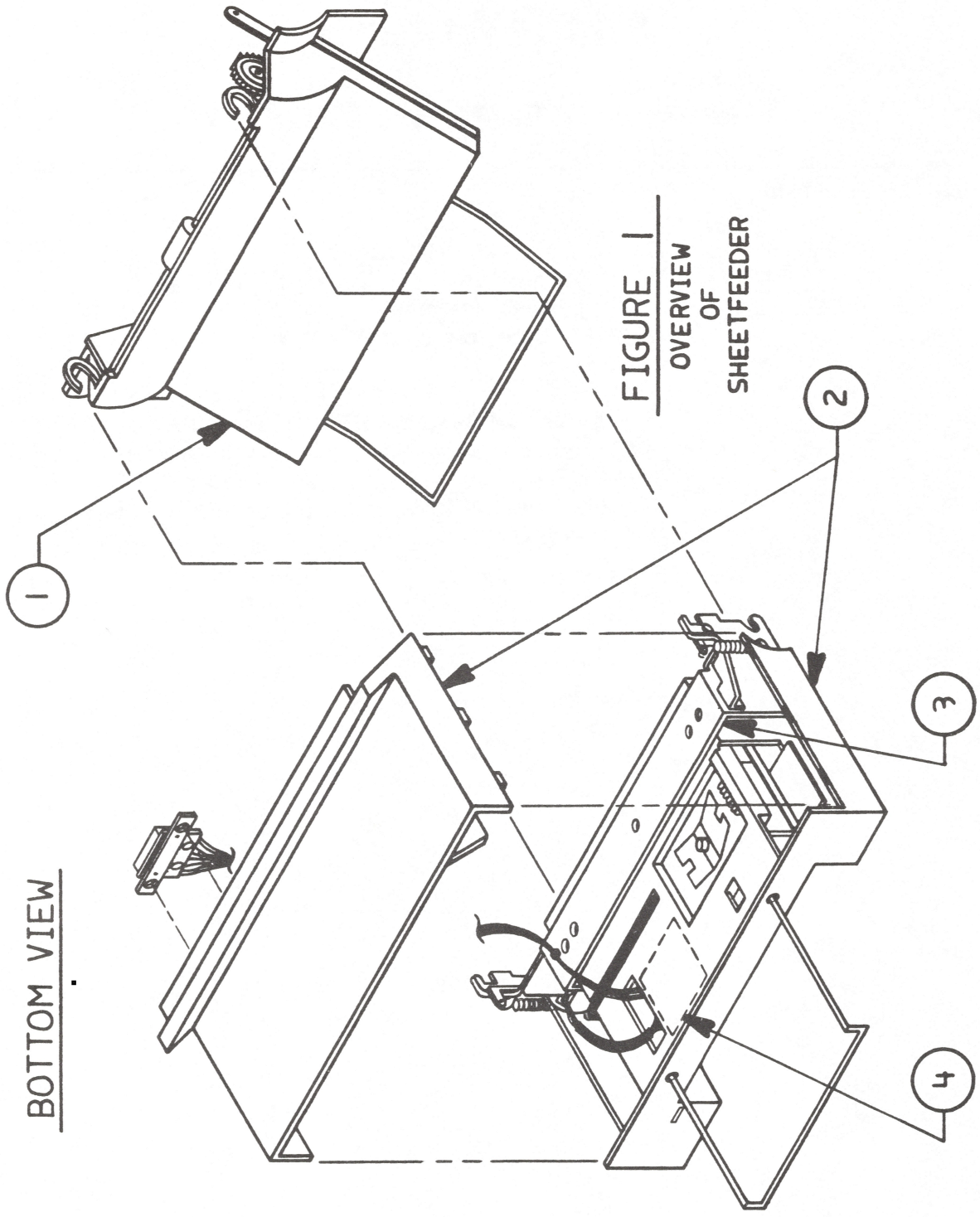

FIGURE 1
OVERVIEW
OF
SHEETFEEDER

❑ IMAGEWRITER II SHEETFEEDER - OVERVIEW (Figure 1)

Item	Part No.	Description
-	661-0329	ImageWriter II SheetFeeder, White
	661-0401	ImageWriter II SheetFeeder, Platinum
1	076-0171	SheetFeeder Paper Tray Assembly, White (see Figure 4.)
	076-0242	SheetFeeder Paper Tray Assembly, Platinum (See Figure 4.)
2	076-0169	SheetFeeder Housing, White (See Figure 2, Item 1.)
	076-0241	SheetFeeder Housing, Platinum (See Figure 2, Item 1.)
3	076-0170	SheetFeeder Frame Assembly (See Figure 3.)
4	076-0172	SheetFeeder PCB Assembly (See Figure 2, Item 2.)

Note: The ImageWriter II SheetFeeder must be turned upside down to access any parts for servicing. Therefore, this illustration shows the **underside** of the assembly.

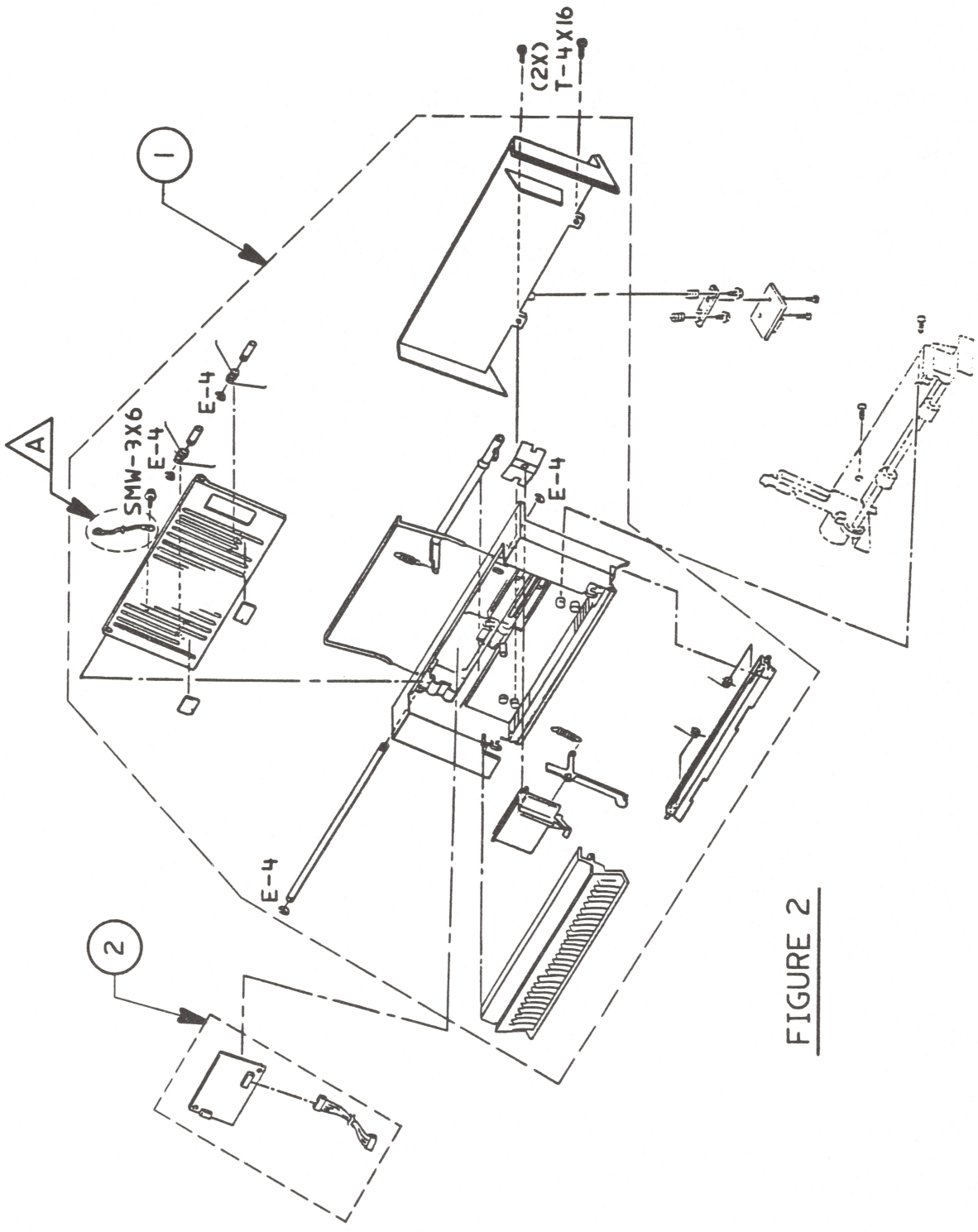

FIGURE 2

❑ IMAGEWRITER II SHEETFEEDER - HOUSING AND PCB (Figure 2)

Item	Part No.	Description
1	076-0169	SheetFeeder Housing, White
	076-0241	SheetFeeder Housing, Platinum
2	076-0172	SheetFeeder PCB Assembly

The following part is not included in the SheetFeeder Housing Assembly, nor is it available for purchase separately. If a repair requires this part, it must be retained from the customer's unit.

A Grounding Strap

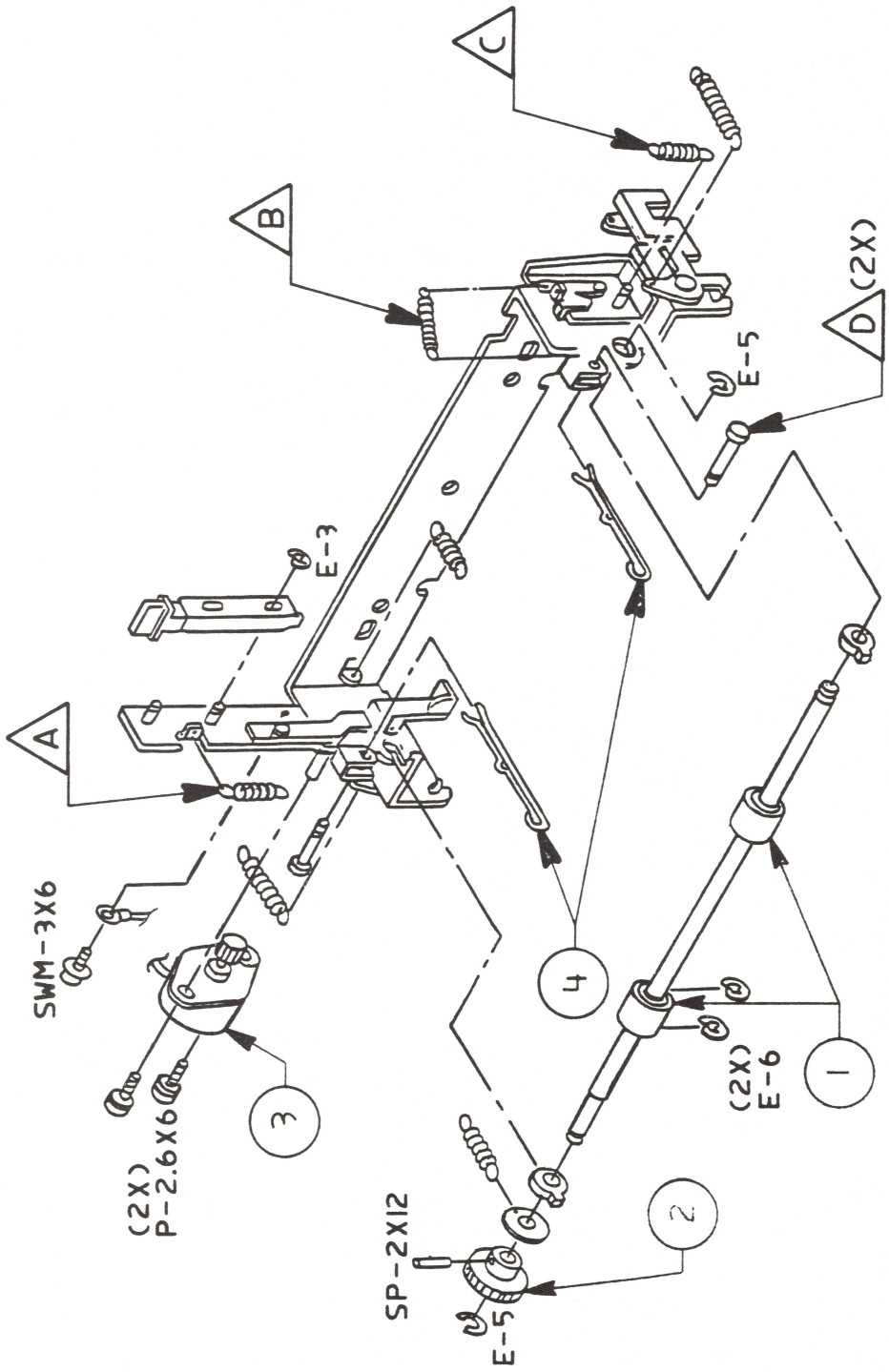

FIGURE 3
FRAME ASSEMBLY

❑ IMAGEWRITER II SHEETFEEDER - FRAME ASSEMBLY (Figure 3)

Item	Part No.	Description
-	076-0170	SheetFeeder Frame Assembly
1	984-0001	Feed Roller
2	953-0007	Gear, Feed Roller
3	959-0015	ImageWriter II SheetFeeder Motor
4	939-0014	Pin Pivot

The following parts are not included in the SheetFeeder Frame Assembly, and they cannot be purchased separately. If a repair requires any of these parts, they must be retained from the customer's unit.

A	Spring
B	Spring
C	Spring
D	Pivot Shaft

Note: 953-0007 is available individually (5 each of the pin pivots and Feed Roller gears) and as part of 076-0170.

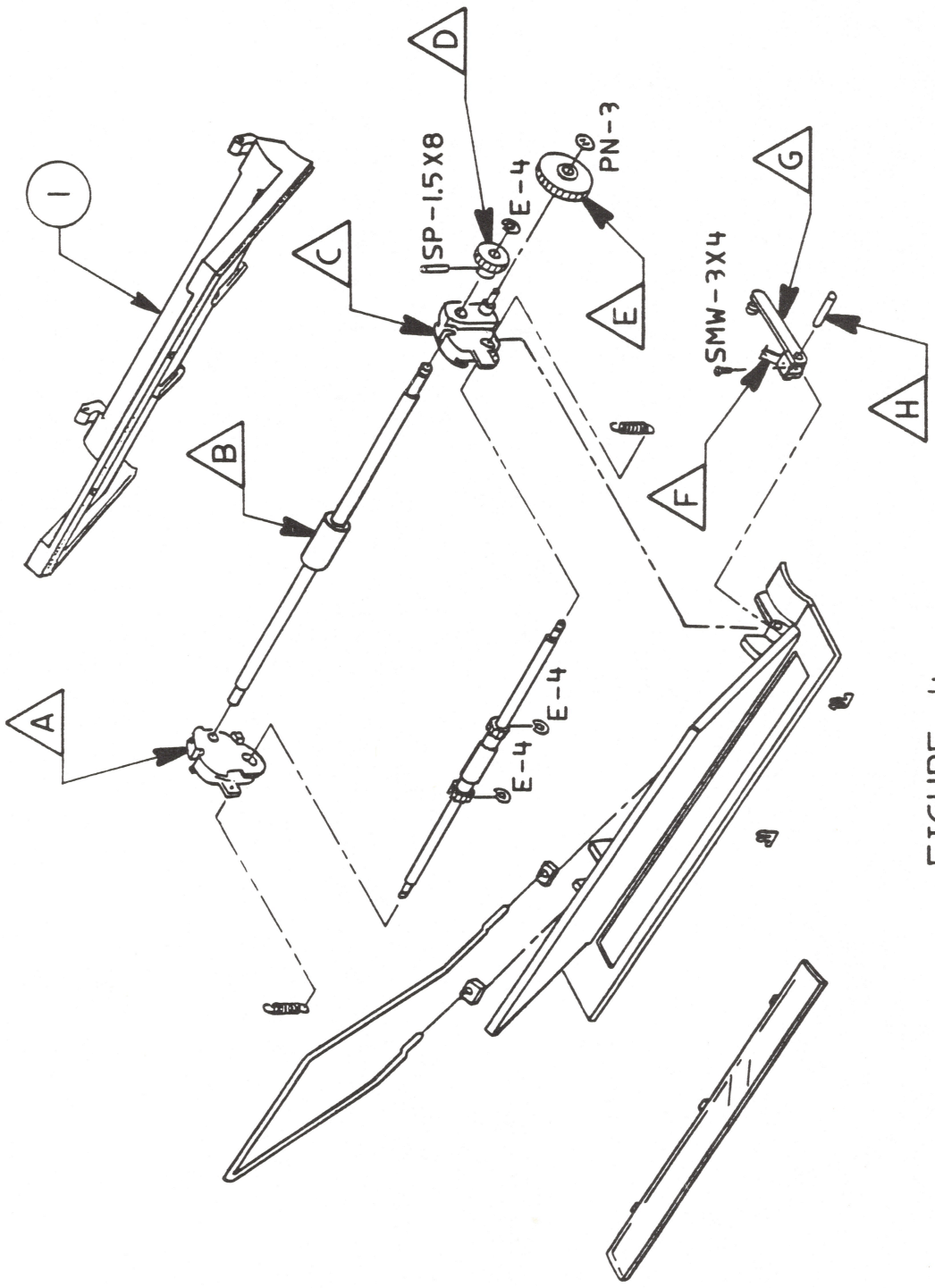

FIGURE 4

PAPER TRAY ASSEMBLY

❑ IMAGEWRITER II SHEETFEEDER - PAPER TRAY ASSEMBLY (Figure 4)

Item	Part No.	Description
-	076-0171	SheetFeeder Paper Tray Assembly, White
	076-0242	SheetFeeder Paper Tray Assembly, Platinum
1	949-0088	Upper Paper Tray, Beige
	949-0136	Upper Paper Tray, Platinum

The following parts are not included in the assembly, and they cannot be purchased separately. If a repair requires any of these parts, they must be retained from the customer's unit.

A Right Roller Holder
B Roller Shaft
C Left Roller Holder
D Roller Gear
E Idler Gear
F Noise Plate Spring
G Paper Tray Detent Plate
H Paper Tray Detent Shaft

Note: For number 1, 949-0088 is included with 076-0171 and 949-0136 is included with 076-0242.

ImageWriter II Technical Procedures

Appendix A

ImageWriter/ ImageWriter II Differences

The question you will be asked often is "What are the differences between the ImageWriter and the ImageWriter II?" Cosmetic differences are apparent. What about operational differences? The chart shown below lists the majority of changed features or added features.

Changed Feature	ImageWriter	ImageWriter II
Interface Port	RS-232	RS-422/423
7/8 Bit Protocol Selection	Hardware Selection DIP Switch 1-5.	Software control only. No DIP switch.
Head Dot Diameter	Wire diameter is .35 mm	Wire diameter is .30 mm. Placement of dots is 50% more accurate.
Speed	Print mode is 120 cps	Standard print mode is 180 cps.
Deselect Action	The entire buffer is printed before stopping.	A maximum of 2 more lines is printed; the printer will then stop.
Tractor Feed Disengagement	Paper must be removed from tractors.	Select friction feed mode and tractors are automatically disengaged.
Paper Bail	Must be pulled away from the platen to load paper.	Automatically loads paper.
Printing Area	Requires 3 line top margin.	Entire length of paper.
Vertical Paper Motion	Feeds paper at 1.67 inches per sec.	Feeds paper at 4.0 inches per sec.

Added Feature	ImageWriter II
Multiple Fonts	Draft-240 cps Standard-180 cps NLQ-25 cps
Auto Paper Load	Automatically loads paper when form feed button is pressed.
Color Capability	Color option printing with a four color ribbon.
Sheet Feeder	Accepts a single bin cut sheet feeder.
Option Card	Will accept one of the two option cards available: AppleTalk card or the Expanded Buffer card.
MouseText	Character set contains 32 special characters for use on Apple II computers.
Self Identification	The printer automatically determines its operational mode by checking to see if there is a color ribbon, a sheet feeder and/or an option card installed.
New DIP Switches	Option Card Enable function is Switch 2-4. The Perforation Skip is Switch 1-5 (this switch causes the printer to skip over the last 1/2" of a page and the top 1/2" of the following page).